FLUOR®

Appendix

Niels Stikvoort
August 2013

Table of Contents

Tables list 3
Figure list 3
Symbol list 4
Appendix A Contact list 5
Appendix B Calculation waste heat Port of Rotterdam 7
Appendix C Business case 9
Schematic block diagram RENEW 10
Appendix D Calculation & Specification 11
D I Calculation 12
Water specification 12
Diameter 12
Pump power 12
Pressure difference 12
Calculation coefficient of friction 13
D II Specification pipe sections primary & secondary network 14
Standard input 14
Specification primary network 15
Specification secondary network 16
Appendix E Estimate 17
Estimate primary network 18
Estimate Secondary network 21
Estimate Circle 23
Appendix F Exploitation electric, gas & thermal power 24
Phase 1: Circle 25
Phase 2: Transition from circle to waste heat 28

Tables list

Table 1 Contact list 6
Table 2 Calculation waste heat Port of Rotterdam 8
Table 3 Water specification 12
Table 4 Input primary network 14
Table 5 Input secondary network 14
Table 6 Specification pipe sections primary network 15
Table 7 Specification pipe sections secondary network 16
Table 8 Estimate primary network 18
Table 9 Estimate secondary network 21
Table 10 Estimate circle 23
Table 11 Phase 1: Existing fees 25
Table 12 Phase 1: Future fees 26
Table 13 Phase 1: Difference, in-& output 27
Table 14 Phase 2: Existing fees 28
Table 15 Phase 2: Future fees 29
Table 16 Phase 2: Difference, in- & output 30

Figure list

Figure 1 Schematics block diagram RENEW 10
Figure 2 Moody-diagram 13

Symbol list

A	Surface	[m2]
c_p	Specific heat	[J / kg * K]
D	Diameter	[m]
e	Absolute roughness	[m]
f	Friction factor	[-]
L	Length	[m]
m	Mass	[kg]
P	Power	[W]
p	Pressure	[Pa]
Q	Heat	[J]
T	Temperature	[K]
U	Energy	[J]
v	Speed	[m/s]
Re	Reynold	[-]
Δ	Difference	[-]
ε	Relative roughness	[-]
η	Dynamic viscosity	[Pa * s]
η	Efficiency	[%]
λ	Coefficient of friction	[-]
ρ	Density	[kg / m^3]
Φ_m	Mass flow	[kg / s]
Φ_v	Volume flow	[m^3 / s]
th	Thermal	
e	Electricity	

Unit symbol	Unit name	Conversion
J	Joule	1 Ws
W	Watt	1 J/s

Prefix	Name	Factor	Factor
k	Kilo-	10^3	1,000
M	Mega-	10^6	1,000,000
G	Giga-	10^9	1,000,000,000
T	Tera-	10^{12}	1,000,000,000,000
P	Peta-	10^{15}	1,000,000,000,000,000

Appendix A Contact list

- **Name**
- **Company**
- **Address**
- **Telephone**
- **Mobile**
- **E-mail**
- **Website**

Table 1 Contact list

Name	Arie Vellekoop	**Name**	Frans Pijls
Company	Westland Infra	**Company**	Community Westland
Address	Nieuweweg 1, Poeldijk	**Address**	Van Geeststraat 1, 's-Gravenzande
Telephone	+31(0)174 236 226	**Telephone**	14074
Mobile	+31(0)6 519 87 041	**Mobile**	-
E-mail	Arie.vellekoop@westlandinfra.nl	**E-mail**	fpijls@gemeentewestland.nl
Website	www.westlandinfra.nl	**Website**	www.gemeentewestland.nl
Name	Jeroen Straver	**Name**	Lydia Dijkshoorn
Company	Community Westland	**Company**	AgentschapNL
Address	Van Geeststraat 1, 's-Gravenzande	**Address**	-
Telephone	+31(0)174 672 415	**Telephone**	+31(0)88 602 2277
Mobile	+31(0)6 519 49 518	**Mobile**	-
E-mail	jcajstraver@gemeentewestland.nl	**E-mail**	Lydia.dijkshoorn@agentschapnl.nl
Website	www.gemeentewestland.nl	**Website**	www.warmteatlas.nl
Name	Dennis in 't Groen	**Name**	Peter Leijs
Company	Visser & Smit Hanab	**Company**	Visser & Smit Hanab
Address	Albertplesmanweg 161, Rotterdam	**Address**	Rietgorsweg 6, Papendrecht
Telephone	-	**Telephone**	-
Mobile	+31(0)6 504 28 937	**Mobile**	+31(0)6 153 49 479
E-mail	-	**E-mail**	p.leijs@vshanab.nl
Website	www.vshanab.nl	**Website**	www.vshanab.nl
Name	Gaby Duijndam	**Name**	Guy Konings
Company	LTO Glaskracht	**Company**	Stedin
Address	Plaspolder 130, Bleiswijk	**Address**	Blaak 8, Rotterdam
Telephone	+31(0)108 008 404	**Telephone**	+31(0)888 963 721
Mobile	-	**Mobile**	+31(0)6 537 64 623
E-mail	gduijndam@ltonoordglaskracht.nl	**E-mail**	Guy.konings@stedin.net
Website	www.ltonoordglaskracht.nl	**Website**	www.stedin.net
Name	Maurice Verhulst	**Name**	Arend Bosma
Company	Weijers Waalwijk BV	**Company**	Provincie Zuid-Holland
Address	Cartografenweg 14a, Waalwijk	**Address**	Zuid-Hollandplein 1, Den Haag
Telephone	+31(0)416 651 127	**Telephone**	+31(0)704 416 684
Mobile	+31(0)6 518 14 553	**Mobile**	-
E-mail	mverhulst@weijers-waalwijk.nl	**E-mail**	a.bosma@pzh.nl
Website	www.weijers-waalwijk.nl	**Website**	www.zuid-holland.nl
Name	Jacob Limbeek		
Company	OCAP		
Address	Havenstraat 1, Schiedam		
Telephone	+31(0)102 461 1280		
Mobile	-		
E-mail	Jacob.limbeek@ocap.nl		
Website	www.ocap.nl		

Appendix B Calculation waste heat Port of Rotterdam

- **Power output**
- **Efficiency plant**
- **Efficiency power conversion**
- **Efficiency heat exchanger**
- **Waste heat**

Calculation waste heat in Port of Rotterdam

Table 2 Calculation waste heat Port of Rotterdam

Company	Power output [MW_e]	Efficiency Plant [%]	Efficiency Power conversion [%]	Efficiency heat exchanger [%]	Waste heat [MW_{th}]
E.ON Benelux MPP1 & MPP2	1040	30	50	90	328
E.ON Benelux MPP3	1070	48	50	90	250
Electrabel	800	40	50	90	202
EnecoGen	870	60	50	90	150
Indorama / Utility Partners	70	60	50	90	25
BP	150	40	50	90	40
Total	**3939**				**995**

Example:

E.ON Benelux MPP1 & MPP2 has a power output of 1040 MW_e. The efficiency of the plant in which the power can be converted to electricity is 30%. That means 70% of the power is lost and can be reused for other purposes. However, approximately 50% of the power can reused for thermal purposes. After that, 90% of the power is transferred by heat exchanger(s) to the thermal network.

$$Electric\ power\ output * (1 - Efficieny\ plant) * Efficiency\ energy\ conversion * Efficiency\ heat\ exchanger = usefull\ waste\ heat \rightarrow 1040\ MW_e * 70\% * 50\% * 90\% = 328\ MW_{th}$$

Appendix C Business case

- **Schematic block diagram RENEW**

Schematic block diagram RENEW

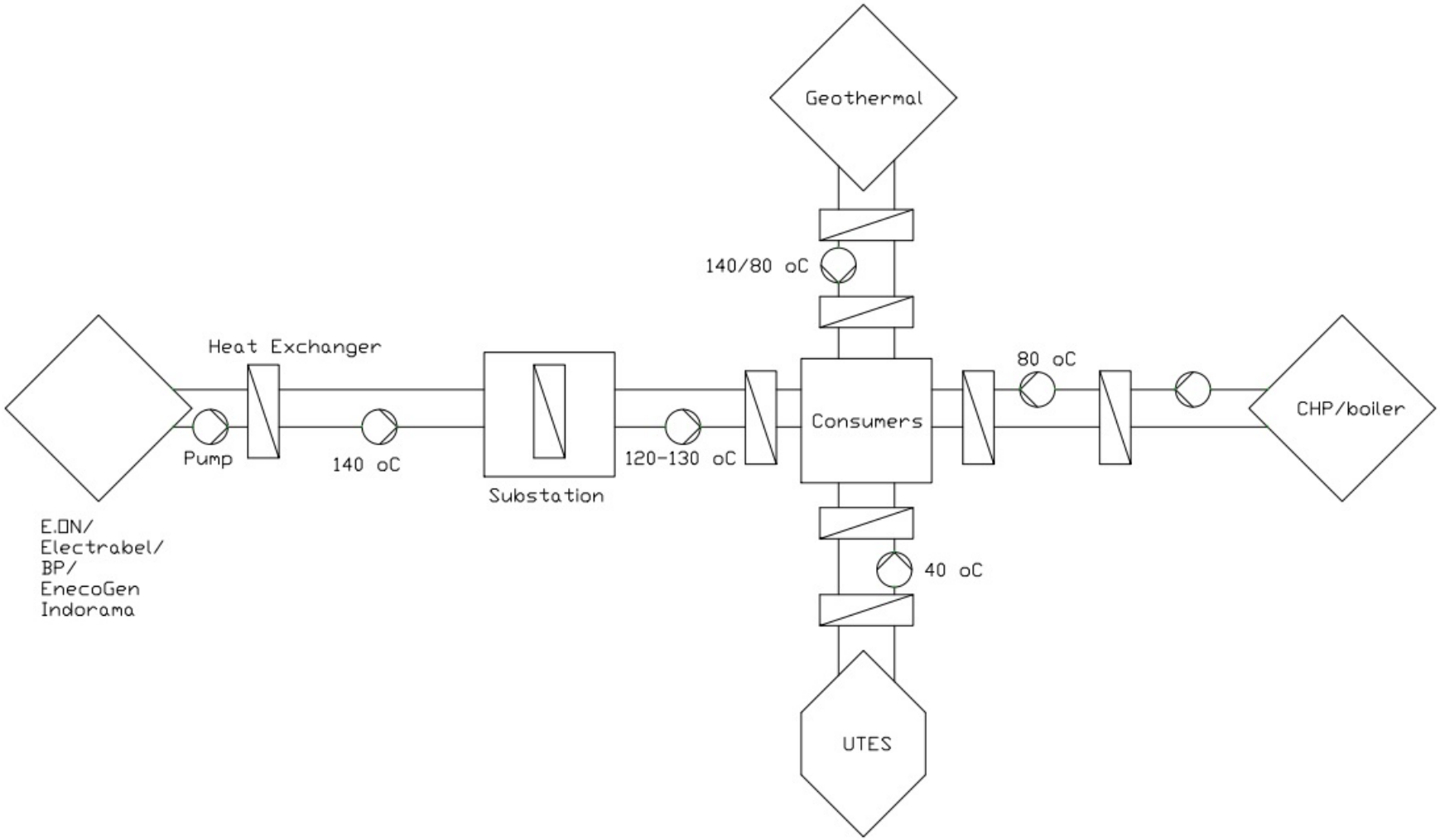

Figure 1 Schematics block diagram RENEW

Appendix D Calculation & Specification

I Calculation

- **Water specification**
- **Formula diameter**
- **Formula pump power**
- **Formula pressure difference**
- **Formula coefficient of friction**

II Specification pipe sections

- **Input**
- **Specification primary network**
- **Specification secondary network**

D I Calculation

This appendix contains the water specification at 100 degrees Celsius, the formulas for the diameter, pump power, pressure difference and coefficient of friction. After that, the tables for the primary and secondary network are shown. This contains: the input, the pipeline parts against the thermal power, length, water flow, calculated diameter, pump power, pressure difference, amount of water and surface of the heat exchanger.

Water specification

Table 3 Water specification

Water specification 100 degrees Celsius

Density	958.4	kg/m^3
dynamic viscosity	0.0002818	Pa*s
kinematic viscosity	0.000000294	m^2/s
specific heat cp	4215.9	J/kgK
entropy	1307	J/kgK
enthalpy	419100	J/kg

Diameter

The main formula for the thermal power (Taal, 2008) is:

$$Q = \phi_m * c_p * \Delta T \;\; with \; \phi_m = \rho * \phi_v \, ; Q = P_{th}$$

The formula can also be written as:

$$P_{th} = \rho * \phi_v * c_p * \Delta T \;\; with \; \phi_v = v * A = v * \frac{\pi}{4} D^2$$

If the Diameter (D) is put in front of the formula, we get:

$$D = \sqrt{\frac{P_{th}}{v * \frac{\pi}{4} * c_p * \rho * \Delta T}}$$

Known:

$c_{p,water}$ = 4.2159 *10^3 J/kgK at 100 °C

Pump power

To determine the required power for the pump (Ouwehand, Papa, Taal, & Post, 2008), the following formula is used:

$$P_{pump} = \frac{\Delta p * \phi_v}{\eta}$$

Pressure difference

The pressure difference or pressure loss (Taal, Toegepaste Energieleer, 2008) in the pipeline can be determined through:

$$\Delta p = \frac{\lambda L}{D} * \frac{1}{2} * \rho * v^2$$

Calculation coefficient of friction

To calculate the coefficient of friction (f) or λ (lambda) you will need the Moody-diagram. This diagram cross references with Reynolds and the relative roughness. The Reynolds code is:

$$Re = \frac{\rho * v * D}{\eta}$$

The relative roughness is calculated with:

$$\varepsilon = \frac{e}{D}$$

For an estimation of the lambda value an approximation is made. There are many approaches of Colebrook (Wikipedia, 2013) to calculate this, but the most accurate formula is chosen. This is tested by comparing the data with the Moody-Diagram. Both approaches are shown below and in the appendix.

Formula for coefficient of friction:

$$f = \frac{1}{\left(2 * \log\left(\frac{\varepsilon}{3.72 * D} + \frac{5.74}{Re^{0.901}}\right)\right)^2}$$

This is also possible to see in the Moody diagram:

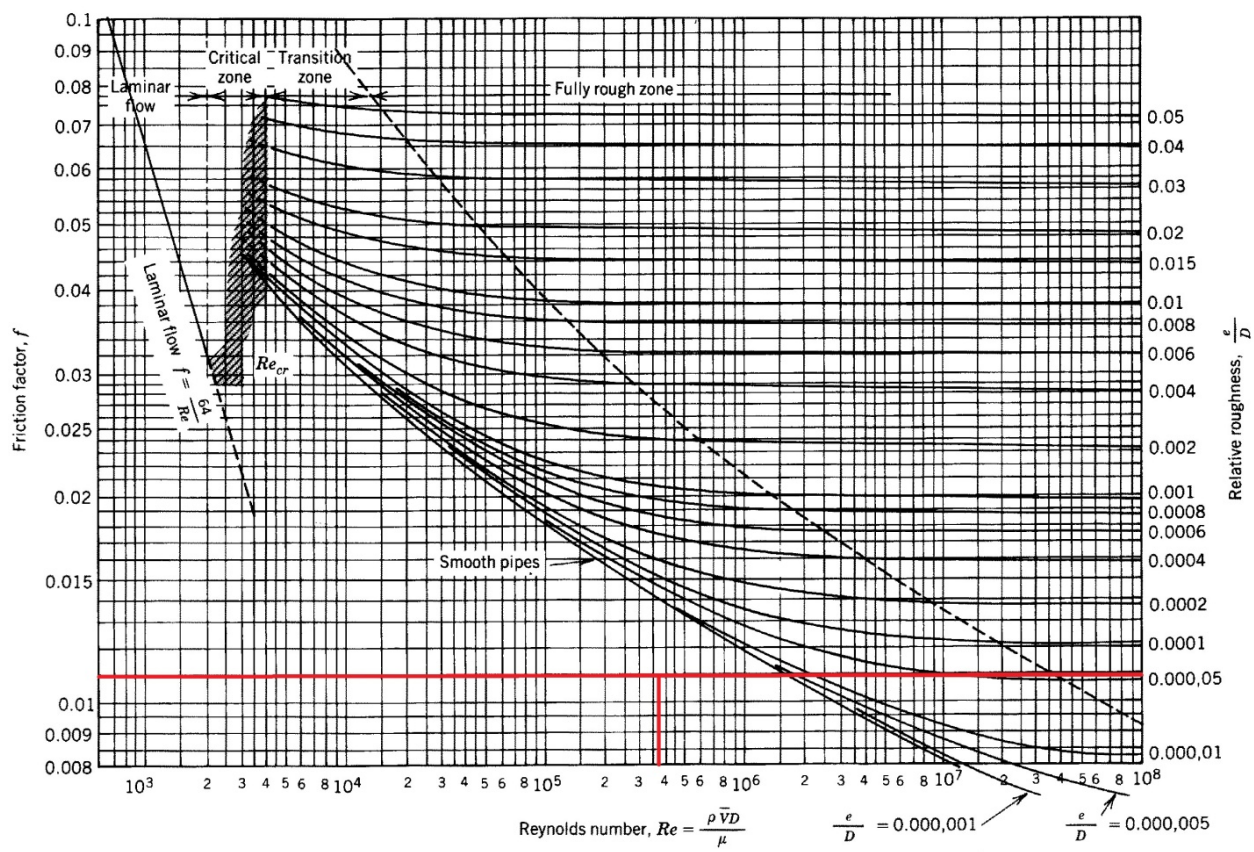

Figure 2 Moody-diagram

D II Specification pipe sections primary & secondary network

Standard input

Table 4 Input primary network

Input

Density [kg/m^3]	958.4
Temperature difference [K]	60
Specific heat water [J/kgK]	4215.9
Absolute roughness [m]	0.0001
Dynamic viscosity [Pa*s]	0.0002818
Efficiency electric pump [%]	80
Thermal transmittance [W/m^{2}K]	5500

Table 5 Input secondary network

Input

Density [kg/m^3]	958.4
Temperature difference [K]	60
Specific heat water [J/kgK]	4215.9
Absolute roughness [m]	0.0001
Dynamic viscosity [Pa*s]	0.0002818
Efficiency electric pump [%]	80
Thermal transmittance [W/m^{2}K]	5500

Specification primary network

Table 6 Specification pipe sections primary network

Pipeline section (#)	EON (1,3,5,7,9)	Electrabel (2)	BP (4)	EnecoGen (6)	Indorama (8)
Thermal power [MW]	497.5	200	40	150	25
Length [m]	32000	7200	800	200	3200
v [m/s]	2.5	2	2	2	2
ϕv [m^3/h]	7,254	3,738	590	2,104	421
Calculated diameter [mm]	1,022	725	324	628	256
Chosen D (DN) [mm]	1000	800	300	600	250
Chosen D [mm]	1013	813	323	610	273
Reynoulds [-]	8,613,016	5,530,015	2,197,041	4,149,212	1,856,942
Relative roughness [-]	0.0003	0.0003	0.0009	0.0005	0.0010
f [λ)	0.01	0.02	0.03	0.02	0.03
Pressure loss [Pa]	1,398,051.04	275,773.20	120,960.38	11,613.54	629,366.08
Pressure loss [bar]	13.98	2.76	1.21	0.12	6.29
Pressure loss / meter [Pa/m]	43.7	38.3	151.2	58.1	196.7
Electric pump power [kW]	3,521	358	25	8	92
Water (liter)	25,132,741	3,619,115	56,549	56,549	157,080
Remark	2 x pipe & pump & HE	-	-	-	-

Specification secondary network

Table 7 Specification pipe sections secondary network

Pipeline section (#)	2 x 1	2 x 2	2 x 3	2 x 4	5	2 x 6
Thermal power [MW]	75	150	125	147.5	7	275
Length [m]	6200	10000	4000	6000	10000	11500
v [m/s]	2.5	2.5	2.5	2.5	2.5	2.5
ϕv [m^3/h]	1,165	2,630	1,824	2,630	137	4,672
Calculated diameter [mm]	397	561	512	557	121	760
Chosen D (DN) [mm]	400	600	500	600	125	800
Chosen D [mm]	406	610	508	610	139	813
Reynoulds [-]	3,452,008	5,186,515	4,319,261	5,186,515	1,181,845	6,912,519
Relative roughness [-]	0.0007	0.0005	0.0006	0.0005	0.0020	0.0003
f [λ)	0.02	0.02	0.02	0.02	0.04	0.02
Pressure loss [Pa]	1,030,676.78	906,143.00	474,881.67	543,685.80	9,317,005.52	687,111.51
Pressure loss [bar]	10.31	9.06	4.75	5.44	93.17	6.87
Pressure loss / meter [Pa/m]	166.2	90.6	118.7	90.6	931.7	59.7
Electric pump power [kW]	417	828	301	497	442	1,115
Water (liter)	802,664	2,922,467	810,732	1,753,480	151,747	5,969,924
Remark	2 x pipe & pump + HE	2 x pipe & pump + HE	2 x pipe & pump + HE	2 x pipe & pump + HE	2 x pipe & pump + HE	2 x pipe & pump + HE

Appendix E Estimate

- **Primary network**
- **Secondary Network**
- **Circle**

Estimate primary network

Table 8 Estimate primary network

Primary Network									
Item									
MPP2	Remark	Amount	Unit	Material (€)	Labor (factor 2.5)	Indirect (factor 1.5)	Contingency (15%)	Escalation (20%)	Total
Heat Exchanger tower	330 MW_{th}	1	-	16,800,000	25,200,000	8,400,000	3,780,000	756,000	54,936,000
Pump	8 kW_e	1	-	50,000	75,000	25,000	11,250	2,250	163,500
Pipes + fittings		20	m	220,000	330,000	110,000	49,500	9,900	719,400
maintenance		2	-	1,000,000	1,500,000	500,000	225,000	45,000	3,270,000
Labor (yearly)		2	-	1,138,800	1,708,200	569,400	256,230	51,246	3,723,876
Total				**19,208,800**	**28,813,200**	**9,604,400**	**4,321,980**	**864,396**	**62,812,776**
MPP3	Remark	Amount	Unit	Material (€)	Labor (factor 2.5)	Indirect (factor 1.5)	Contingency (15%)	Escalation (20%)	Total
Heat Exchanger tower	250 MW_{th}	1	-	12,800,000	19,200,000	6,400,000	2,880,000	576,000	41,856,000
Pump	8 kW_e	1		50,000	75,000	25,000	11,250	2,250	163,500
Pipes, fittings		20	m	220,000	330,000	110,000	49,500	9,900	719,400
maintenance		2	-	1,000,000	1,500,000	500,000	225,000	45,000	3,270,000
Labor (yearly)		2	-	1,138,800	1,708,200	569,400	256,230	51,246	3,723,876
Total			-	**15,208,800**	**22,813,200**	**7,604,400**	**3,421,980**	**684,396**	**49,732,776**
Electrabel	Remark	Amount	Unit	Material (€)	Labor (factor 2.5)	Indirect (factor 1.5)	Contingency (15%)	Escalation (20%)	Total
Heat Exchanger tower	200 MW_{th}	1	-	10,200,000	15,300,000	5,100,000	2,295,000	459,000	33,354,000
Pump	8 kW_e	1		50,000	75,000	25,000	11,250	2,250	163,500
Pipes, fittings		20	m	220,000	330,000	110,000	49,500	9,900	719,400
maintenance		2	-	1,000,000	1,500,000	500,000	225,000	45,000	3,270,000
Labor (yearly)		2	-	1,138,800	1,708,200	569,400	256,230	51,246	3,723,876
Total			-	**12,608,800**	**18,913,200**	**6,304,400**	**2,836,980**	**567,396**	**41,230,776**
BP	Remark	Amount	Unit	Material (€)	Labor (factor 2.5)	Indirect (factor 1.5)	Contingency (15%)	Escalation (20%)	Total
Heat Exchanger	40 MW_{th}	1	-	2,100,000	3,150,000	1,050,000	472,500	94,500	6,867,000

Pump	8 kW_e	1		30,000	45,000	15,000	6,750	1,350	98,100
Pipes, fittings		20	m	220,000	330,000	110,000	49,500	9,900	719,400
maintenance		2	-	1,000,000	1,500,000	500,000	225,000	45,000	3,270,000
Labor (yearly)		2	-	1,138,800	1,708,200	569,400	256,230	51,246	3,723,876
Total				**4,488,800**	**6,733,200**	**2,244,400**	**1,009,980**	**201,996**	**14,678,376**
EnecoGen	Remark	Amount	Unit	Material (€)	Labor (factor 2.5)	Indirect (factor 1.5)	Contingency (15%)	Escalation (20%)	Total
Heat Exchanger tower	150 MW_{th}	1	-	7,800,000	11,700,000	3,900,000	1,755,000	351,000	25,506,000
Pump	8 kW_e	1	-	50,000	75,000	25,000	11,250	2,250	163,500
Pipes, fittings		20	m	220,000	330,000	110,000	49,500	9,900	719,400
maintenance		2	-	1,000,000	1,500,000	500,000	225,000	45,000	3,270,000
Labor (yearly)		2	-	1,138,800	1,708,200	569,400	256,230	51,246	3,723,876
Total				**10,208,800**	**15,313,200**	**5,104,400**	**2,296,980**	**459,396**	**33,382,776**
Indorama	Remark	Amount	Unit	Material (€)	Labor (factor 2.5)	Indirect (factor 1.5)	Contingency (15%)	Escalation (20%)	Total
Heat Exchanger	25 MW_{th}	1	-	1,400,000	2,100,000	700,000	315,000	63,000	4,578,000
Pump	8 kW_e	1	-	30,000	45,000	15,000	6,750	1,350	98,100
Pipes, fittings		20	m	20,000	30,000	10,000	4,500	900	65,400
maintenance		2	-	1,000,000	1,500,000	500,000	225,000	45,000	3,270,000
Labor (yearly)		2	-	1,138,800	1,708,200	569,400	256,230	51,246	3,723,876
Total				**3,588,800**	**5,383,200**	**1,794,400**	**807,480**	**161,496**	**11,735,376**
Primary pipelines	Remark	Amount	Unit	Material (€)	Labor (factor 2.5)	Indirect (factor 1.5)	Contingency (15%)	Escalation (20%)	Total
Heat exchanger MPP2	330 MW_{th}	1	-	17,000,000	25,500,000	8,500,000	3,825,000	765,000	55,590,000
MPP3	250 MW_{th}	1	-	12,800,000	19,200,000	6,400,000	2,880,000	576,000	41,856,000
Electrabel	200 MW_{th}	1	-	10,200,000	15,300,000	5,100,000	2,295,000	459,000	33,354,000
BP	40 MW_{th}	1	-	2,100,000	3,150,000	1,050,000	472,500	94,500	6,867,000
EnecoGen	150 MW_{th}	1	-	7,800,000	11,700,000	3,900,000	1,755,000	351,000	25,506,000
Indorama	25 MW_{th}	1	-	1,400,000	2,100,000	700,000	315,000	63,000	4,578,000
Pump primary + fittings	3.6 MW; 7254 m^3/h	2	-	2,300,000	3,450,000	1,150,000	517,500	103,500	7,521,000
Electrabel	3608 kW_e; 3728 m^3/h	1	-	280,000	420,000	140,000	63,000	12,600	915,600
BP	25 8 kW_e; 590 m^3/h	1	-	45,000	67,500	22,500	10,125	2,025	147,150

EnecoGen	8 kW_e; 2104 m^3/h	1	-	11,000	16,500	5,500	2,475	495	35,970
Indorama	92 kW_e; 421 m^3/h	1	-	90,000	135,000	45,000	20,250	4,050	294,300
Pipelines primary - crossover	2 times; DN1000	21,000	m	19,740,000	29,610,000	9,870,000	4,441,500	888,300	64,549,800
Electrabel	DN800	7,200	m	2,635,200	3,952,800	1,317,600	592,920	118,584	8,617,104
Bp	DN300	800	m	86,400	129,600	43,200	19,440	3,888	282,528
EnecoGen	DN600	200	m	52,000	78,000	26,000	11,700	2,340	170,040
Indorama	DN250	1,600	m	134,400	201,600	67,200	30,240	6,048	439,488
Crossover	2 times; DN1000	11,000	m	37,400,000	56,100,000	18,700,000	8,415,000	1,683,000	122,298,000
Substation		1	-	1,250,000	1,875,000	625,000	281,250	56,250	4,087,500
Heat exchangers		3	-	41,100,000	61,650,000	20,550,000	9,247,500	1,849,500	134,397,000
Instrumentation + piping			-	8,220,000	12,330,000	4,110,000	1,849,500	369,900	26,879,400
Control building		60	m2	78,000	117,000	39,000	17,550	3,510	255,060
System control		1	-	112,000	168,000	56,000	25,200	5,040	366,240
Instrumentation flow		14	-	122,450	183,675	61,225	27,551	5,510	400,412
Instrumentation pressure		14	-	66,850	100,275	33,425	15,041	3,008	218,600
Instrumentation temperature		14	-	25,200	37,800	12,600	5,670	1,134	82,404
Water	16 Eurocent / m^3	25,943,423	l	4,151	6,226	2,075	934	187	13,574
Total			-	**165,052,651**	**247,578,976**	**82,526,325**	**37,136,846**	**7,427,369**	**539,722,169**
Total + Companies									**753,295,025**

Estimate Secondary network

Table 9 Estimate secondary network

Secondary Network									
Item									
Geothermal	Remark	Amount	Unit	Material (€)	Labor (factor 2.5)	Indirect (factor 1.5)	Contingency (15%)	Escalation (20%)	Total
Noordland & Kapittelland	1.5 million/MW_{th} 3700 m	30	MW	45,000,000				9,000,000	54,000,000
Geo Power Oudcamp	1.5 million/ MW_{th} 4000 m	25	MW	37,500,000				7,500,000	45,000,000
Harting-Vollebregt	2300 m	7	MW	10,500,000				2,100,000	12,600,000
FloraHolland	2500 m	25	MW	37,500,000				7,500,000	45,000,000
Tomselect	2400 m	7	MW	10,500,000				2,100,000	12,600,000
Leyenburg	2200 m	7	MW	10,500,000				2,100,000	12,600,000
Total				**151,500,000**				**30,300,000**	**181,800,000**
Secondary pipelines	Remark	Amount	Unit	Material (€)	Labor (factor 2.5)	Indirect (factor 1.5)	Contingency (15%)	Escalation (20%)	Total
Heat Exchangers #1	2 x 75 MW_{th}	2	-	7,800,000	11,700,000	3,900,000	1,755,000	351,000	25,506,000
#2	2 x 150 MW_{th}	2	-	15,400,000	23,100,000	7,700,000	3,465,000	693,000	50,358,000
#3	2 x 125 MW_{th}	2	-	12,800,000	19,200,000	6,400,000	2,880,000	576,000	41,856,000
#4	2 x 147.5 MW_{th}	2	-	15,000,000	22,500,000	7,500,000	3,375,000	675,000	49,050,000
#5	1 x 7 MW_{th}	1	-	33,000	49,500	16,500	7,425	1,485	107,910
Pump + fittings #1	1 x 417 kW_e	1	-	310,000	465,000	155,000	69,750	13,950	1,013,700
#2	2 x 414 kW_e	2	-	620,000	930,000	310,000	139,500	27,900	2,027,400
#3	1 x 301 kW_e	1	-	246,000	369,000	123,000	55,350	11,070	804,420
#4	1 x 497 kW_e	1	-	386,000	579,000	193,000	86,850	17,370	1,262,220
#5	1 x 442 kW_e	1	-	330,000	495,000	165,000	74,250	14,850	1,079,100
#6	2 x 558 kW_e	2	-	810,000	1,215,000	405,000	182,250	36,450	2,648,700

Pipelines + fittings #1	2 x DN400	6,200	m	2,901,600	4,352,400	1,450,800	652,860	130,572	9,488,232
#2	2 x DN600	10,000	m	7,800,000	11,700,000	3,900,000	1,755,000	351,000	25,506,000
#3	2 x DN500	4,000	m	2,520,000	3,780,000	1,260,000	567,000	113,400	8,240,400
#4	2 x DN600	6,000	m	4,680,000	7,020,000	2,340,000	1,053,000	210,600	15,303,600
#5	1 x DN125	10,000	m	500,000	750,000	250,000	112,500	22,500	1,635,000
#6	2 x DN800	11,500	m	12,523,500	18,785,250	6,261,750	2,817,788	563,558	40,951,845
Control building		4	-	101,000	151,500	50,500	22,725	4,545	330,270
System control		4	-	112,000	168,000	56,000	25,200	5,040	366,240
Instrumentation flow	2 x pipes	12	-	95,700	143,550	47,850	21,533	4,307	312,939
Instrumentation pressure	2 x pipes	12	-	57,300	85,950	28,650	12,893	2,578	187,371
Instrumentation temperature	2 x pipes	16	-	28,800	43,200	14,400	6,480	1,296	94,176
District heating lines	DN60	80,000	m	8,000,000	12,000,000	4,000,000	1,800,000	360,000	26,160,000
Pump	0.62 kW_e; 1200	1,200	-	144,000	216,000	72,000	32,400	6,480	470,880
HE	1200 greenhouses	1,200	-	19,200,000	28,800,000	9,600,000	4,320,000	864,000	62,784,000
Valve + instrumention	1200 greenhouses	1,200	-	300,000	450,000	150,000	67,500	13,500	981,000
Installation cables	16 x 2 x 1.3	50,000	-	2,792,500	4,188,750	1,396,250	628,313	125,663	9,131,475
Water	16 Eurocent / m^3	38,080,711	l	6,093	9,139	3,046	1,371	274	19,924
Permits		200	-	200,000	300,000	100,000	45,000	9,000	654,000
Total			**-**	**115,697,493**	**173,546,239**	**57,848,746**	**26,031,936**	**5,206,387**	**378,330,802**
Total + Geothermal									**560,130,802**

Estimate Circle

Table 10 Estimate circle

Circle #1	Remark	Amount	Unit	Material (€)	Labor (factor 2.5)	Indirect (factor 1.5)	Contingency (15%)	Escalation (20%)	Total
Heat Exchangers #1		1	-	7,800,000	11,700,000	3,900,000	1,755,000	351,000	25,506,000
Pump #1	2 x 82 kW_e	2	-	310,000	465,000	155,000	69,750	13,950	1,013,700
Pipelines #1	2 x DN400	6,200	m	2,901,600	4,352,400	1,450,800	652,860	130,572	9,488,232
Control building		1	-	25,250	37,875	12,625	5,681	1,136	82,568
System control		1	-	280,001	420,002	140,001	63,000	12,600	915,603
Instrumentation flow	2 x pipes	3	-	23,925	35,888	11,963	5,383	1,077	78,235
Instrumentation pressure	2 x pipes	3	-	14,325	21,488	7,163	3,223	645	46,843
Instrumentation temperature	2 x pipes	4	-	7,200	10,800	3,600	1,620	324	23,544
District heating lines	DN60	20,000	m	2,000,000	3,000,000	1,000,000	450,000	90,000	6,540,000
Pump	0.62 kW_e; 1200	100	-	12,000	18,000	6,000	2,700	540	39,240
HE		100	-	1,600,000	2,400,000	800,000	360,000	72,000	5,232,000
Installation cables	16 x 2 x 1.3	12,500	-	698,125	1,047,188	349,063	157,078	31,416	2,282,869
Water	16 Eurocent / m^3	1,812,000	L	290	435	145	65	13	948
Permits		50	-	50,000	75,000	25,000	11,250	2,250	163,500
Total				**15,722,716**	**23,584,074**	**7,861,358**	**3,537,611**	**707,522**	**51,413,281**

Appendix F Exploitation electric, gas & thermal power

- **Phase 1: Circle**
    - **Existing fees**
    - **Future fees**
    - **Difference, in- & output**
- **Phase 2: Transition from circle to waste heat**
    - **Existing fees**
    - **Future fees**
    - **Difference, in- & output**

Phase 1: Circle

Table 11 Phase 1: Existing fees

Existing				
Gas greenhouse	**Fee price**		**Amount**	**Total**
Connection fees	6,148.41	Euro	200	1,229,682
Periodic subscription fees	114.81	Euro/year	200	22,962
Standing charges	18.00	Euro/year	200	3,600
Gas price	0.25	Euro/m^3	43,939,949	10,984,987
Total first year	**61,206.16**		**200**	**12,241,231**
Total second year & further	**55,057.75**		**200**	**11,011,549**

Electricity greenhouse	**Fee price**		**Amount**	**Total**
Periodic subscription fees	63.20	Euro/year	200	12,640
Standing charges	441.00	Euro/year	200	88,200
Transmission capacity fee	20.45	Euro/year/kW	9,613.95	196,605
Fee large consumption user	0.02	Euro/kWh	84,218,235.08	1,592,567
Connection fees	3876	Euro	200	775,200
Total first year	**13,326.06**		**200.00**	**2,665,212**
Total second year & further	**9,450.06**		**200.00**	**1,890,012**
Electricity greenhouse (return)				
Fee large consumption user	0.02	Euro/kWh	-289,271,329.18	-5,470,121
Total electricity return				**-5,470,121**
Total electricity first year				**-2,804,909**
Total elec + gas first year				**9,436,323**

Gas households	**Fee price**		**Amount**	**Total**
Connection fees	1,016.64	Euro	4,000	4,066,560
Periodic subscription fees	11.99	Euro/year	4,000	47,960
Standing charges	18.00	Euro/year	4,000	72,000
Gas price	0.65	Euro/m^3	7,000,000	4,550,000
Total first year	**2,184.13**		**4,000**	**8,736,520**
Total second year & further	**1,167.49**		**4,000**	**4,669,960**

Table 12 Phase 1: Future fees

Future				
Electricity greenhouse	**Fee price**		**Amount**	**Total**
Connection fees	3,876.00	Euro	200	775,200
Periodic subscription fees	63.20	Euro/year	200	12,640
Standing charges	441.00	Euro/year	200	88,200
Transmission capacity fee	20.45	Euro/year/kW	9,613.95	196,605
Fee large consumption user	0.02	Euro/kWh	84,218,235.08	1,592,567
Total first year	**13,326.06**		**200**	**2,665,212**
Total second year & further	**9,450.06**		**200**	**1,890,012**

Heat price greenhouses	**Fee price**		**Amount**	**Total**
Connection fees	0.00	Euro	200	0
Periodic subscription fees	0.00	Euro/year	200	0
Standing charges	0.00	Euro/year	200	0
Transmission capacity fee	0.00	Euro/year/kW	100,000	0
Fee consumption user	0.00	Euro/ kW	100,000	0
Payback per kW heat	12.30	Euro/ kW	18,923	-232,754
Total heat first year	**-1,163.77**		**200**	**-232,754**
Total heat second year & further	**-1,163.77**		**200**	**-232,754**
including heat households				**4,437,206**
Electricity greenhouse (return)				
Fee large consumption user	0.02	Euro/kWh	-335,354,662.52	-6,341,557
Total electricity return				**-6,341,557**
Total electricity first year				**-3,676,344**
Total electricity second year & further				**-4,451,544**

Gas greenhouses	**Fee price**		**Amount**	**Total**
Connection fees	6,148.41	Euro	200	1,229,682
Periodic subscription fees	114.81	Euro/year	200	22,962
Standing charges	18.00	Euro/year	200	3,600
Gas price	0.25	Euro/m^3	50,939,948.74	12,734,987
Total first year	**69,956.16**		**200**	**13,991,231**
Total second year & further	**63,807.75**		**200**	**12,761,549**

Heat price households	Fee price		Amount	Total
Connection fees	1,016.64	Euro	4,000.00	4,066,560
Periodic subscription fees	80.00	Euro/year	4,000.00	320,000
Standing charges	200.00	Euro/year	4,000.00	800,000
Transmission capacity fee	10.00	Euro/year/kW	18,923.08	189,231
Fee consumption user	177.60	Euro / kW	18,923.08	3,360,729
Total first year	177.60	Euro / kW		**8,736,520**
Total second year & further				**4,669,960**

Table 13 Phase 1: Difference, in-& output

Existing	First year	Second year <	
Gas costs	12,241,231	11,011,549	
Electricity costs	-2,804,909	-3,580,109	
Total	**9,436,323**	**7,431,441**	
Future	**First year**	**Second year <**	
Electricity costs	-3,676,344	-4,451,544	
Heat costs	-232,754	-232,754	
Gas costs	13,991,231	12,761,549	
Total	**10,082,133**	**8,077,251**	
Difference	**-645,810**	**-645,810**	3,791,396

Input	
Amount greenhouses	200
Amount households	4000
Gas price	0.25

Output	Minimal	Maximal
Investment circle (€)	51,413,281	77,119,922
Payback time (years)	**14**	**20**

Phase 2: Transition from circle to waste heat

Table 14 Phase 2: Existing fees

Existing				
Gas greenhouse	**Fee price**		**Amount**	**Total**
Connection fees	6,148.41	Euro	975	5,994,700
Periodic subscription fees	114.81	Euro/year	975	111,940
Standing charges	18.00	Euro/year	975	17,550
Gas price	0.25	Euro/m^3	214,207,250	53,551,813
Total first year	**61,206.16**		**975**	**59,676,002**
Total second year & further	**55,057.75**		**975**	**53,681,302**

Electricity greenhouse	**Fee price**		**Amount**	**Total**
Periodic subscription fees	63.20	Euro/year	975	61,620
Standing charges	441.00	Euro/year	975	429,975
Transmission capacity fee	20.45	Euro/year/kW	46,868.02	958,451
Fee large consumption user	0.02	Euro/kWh	410,563,896.01	7,763,763
Connection fees	3876	Euro	975	3,779,100
Total first year	**13,326.06**		**975.00**	**12,992,909**
Total second year & further	**9,450.06**		**975.00**	**9,213,809**
Electricity greenhouse (return)				
Fee large consumption user	0.02	Euro/kWh	-1,410,197,729.77	-26,666,839
Total electricity return				**-26,666,839**
Total electricity first year				**-13,673,930**
Total elec + gas first year				**46,002,072**

Gas households	**Fee price**		**Amount**	**Total**
Connection fees	1,016.64	Euro	35,000	35,582,400
Periodic subscription fees	0.05	Euro/year	35,000	1,750
Standing charges	36.00	Euro/year	35,000	1,260,000
Gas price	0.65	Euro/m^3	61,250,000	39,812,500
Total first year	**2,190.19**		**35,000**	**76,656,650**
Total second year & further	**1,173.55**		**35,000**	**41,074,250**

Table 15 Phase 2: Future fees

Future				
Electricity greenhouse	**Fee price**		**Amount**	**Total**
Connection fees	3,876.00	Euro	975	3,779,100
Periodic subscription fees	63.20	Euro/year	975	61,620
Standing charges	441.00	Euro/year	975	429,975
Transmission capacity fee	20.45	euro/year/kW	126,339.89	2,583,651
Fee large consumption user	0.02	euro/kWh	1,106,737,458.81	20,928,405
Total first year	**28,495.13**		**975**	**27,782,751**
Total second year & further	**24,619.13**		**975**	**24,003,651**

Heat price	**Fee price**		**Amount**	**Total**
Connection fees	4,000.00	Euro	975	3,900,000
Periodic subscription fees	80.00	Euro/year	975	78,000
Standing charges	250.00	Euro/year	975	243,750
Transmission capacity fee	5.00	Euro/year/kW	995,000	4,975,000
Fee consumption user	12.30	Euro/kW	995,000	12,238,500
Payback per kW heat	12.30	Euro/kW	123,000	-1,512,900
Total heat first year	**20,433.18**		**975**	**19,922,350**
Total heat second year & further	**16,433.18**		**975**	**16,022,350**
including heat households				**48,282,150**
Electricity greenhouse (return)				
Fee large consumption user	0.02	Euro/kWh	-174,325,950.51	-3,296,504
Total electricity return				**-3,296,504**
Total electricity first year				**24,486,247**
Total electricity second year & further				**20,707,147**

Gas greenhouses	**Fee price**		**Amount**	**Total**
Connection fees	2,722.00	Euro	975	2,653,950
Periodic subscription fees	114.81	Euro/year	975	111,940
Standing charges	18.00	Euro/year	975	17,550
Gas price	0.25	Euro/m^3	26,479,891.22	6,619,973
Total first year	**9,644.53**		**975**	**9,403,413**
Total second year & further	**6,922.53**		**975**	**6,749,463**

Heat price households	Fee price		Amount	Total
Connection fees	1,016.64	Euro	35,000.00	35,582,400
Periodic subscription fees	80.00	Euro/year	35,000.00	2,800,000
Standing charges	200.00	Euro/year	35,000.00	7,000,000
Transmission capacity fee	5.00	Euro/year/kW	123,000.00	615,000
Fee consumption user	177.60	Euro/kW	123,000.00	21,844,800
Total first year				**67,842,200**
Total second year & further				**32,259,800**

Table 16 Phase 2: Difference, in- & output

Existing	First year	Second year <	
Gas costs	59,676,002	53,681,302	
Electricity costs	-13,673,930	-17,453,030	
Total	**46,002,072**	**36,228,273**	
Future	**First year**	**Second year <**	
Electricity costs	24,486,247	20,707,147	
Heat costs	19,922,350	16,022,350	
Gas costs	9,403,413	6,749,463	
Total	**53,812,010**	**43,478,960**	
Difference	**-7,809,938**	**-7,250,687**	41,031,463

Input	
Thermal power	995000
Amount greenhouses	950
Amount households	35000
Gas price	0.25

Output	Minimal	Maximal
Investment circle	753,295,025	1,129,942,537
Payback time (years)	18	28