Do not print or distribute without permission from the authors.

Promoting Science and Technology in Primary Education: A Review of Integrated Curricula

Rens Gresnigt*[#], Ruurd Taconis[#], Hanno van Keulen[#^], Koeno Gravemeijer[#], Liesbeth Baartman[&]

** Teacher Training College, Fontys University of Applied Science, Sittard, the Netherlands*

[#]Eindhoven School of Education, Eindhoven University of Technology, Eindhoven, the Netherlands

[^]Windesheim Flevoland University of Applied Sciences, Almere, the Netherlands

[&] Research Group Vocational Education, Faculty of Education, University of Applied Sciences Utrecht, Utrecht, the Netherlands

*This is an This is an Accepted Manuscript of an article published by Taylor & Francis in STUDIES IN SCIENCE EDUCATION [copyright Taylor & Francis]; available online at http://www.tandfonline.com/*10.1080/03057267.2013.877694
Do not print or distribute without permission from the authors.

Gresnigt, R., Taconis, R., Van Keulen, H., Gravemeijer, K., & Baartman, L. Promoting science and technology in primary education: a review of integrated curricula. *STUDIES IN SCIENCE EDUCATION*. doi: 10.1080/03057267.2013.877694

Corresponding author:

Rens Gresnigt

E-Mail: r.gresnigt@denieuwstepabo.nl Telephone: +316-13950907

Teacher Training College,

Fontys University of Applied Sciences,

P.O. Box 558,

6130 AN Sittard, The Netherlands

Do not print or distribute without permission from the author.

Promoting Science and Technology in Primary Education: A Review of Integrated Curricula

Rens Gresnigt*[#], Ruurd Taconis[#], Hanno van Keulen[#^], Koeno Gravemeijer[#], Liesbeth Baartman[&]

Abstract

Integrated curricula seem promising for the increase of attention on science and technology in primary education. A clear picture of the advantages and disadvantages of integration efforts could help curriculum innovation. This review has focussed on integrated curricula in primary education from 1994 to 2011. The integrated curricula were categorized according to a taxonomy of integration types synthesized from the literature. The characteristics that we deemed important were related to learning outcomes and success/fail factors. A focus group was formed to facilitate the process of analysis and to test tentative conclusions. We concluded that the levels in our taxonomy were linked to (a) student knowledge and skills, the enthusiasm generated among students and teachers, and the teacher commitment that was generated; and (b) the teacher commitment needed, the duration of the innovation effort, the volume and comprehensiveness of required teacher professional development, the necessary teacher support, and the effort needed to overcome tensions with standard curricula. Almost all projects were effective in increasing the time spent on science at school. Our model resolves Czerniac's *definition problem* of integrating curricula in a productive manner, and it forms a practical basis for decision-making by making clear what is needed and what output can be expected when plans are being formulated to implement integrated education.

Keywords: integrated curricula, science, technology, implementation, primary education, elementary education

Introduction

Our society is filled with science and technology, and everyone needs at least a basic level of understanding of it (Osborne & Dillon, 2008). Many people work in jobs related to science and technology, and an ample workforce with suitable schooling in these subjects is needed. Therefore, society needs to foster a positive student attitude toward science and technology (OECD, 2007; Rocard et al., 2007). But students' attitudes toward science and technology appear to be poor in many cases (for an overview see Osborne, Simon, & Collins, 2003; Tytler & Osborne, 2012).

Attitudes toward science and technology are formed before the age of 14 (Osborne & Dillon, 2008) and in primary school (Turner & Ireson, 2010), a decline of interest and positive attitudes appears to have already begun (Murphy & Beggs, 2005). Often, very limited attention is paid to science and technology in primary education in terms of time (e.g. Martin, Mullis, Foy, & Stanco, 2012), and it does not effectively address pupils' attitudes towards science (Turner & Ireson, 2010).

Do not print or distribute without permission from the author.

Globally, various programs have been initiated to increase attention on science and technology education in primary education (Léna, 2006). A key problem that hinders the implementation of more appealing science instruction in primary schools is the issue of the often overloaded curriculum (Dutch Inspectorate Of Education, 2005; Murphy & Beggs, 2005). Another major problem is that primary teachers often avoid teaching science (Appleton, 2007). Factors related to this avoidance include limited subject knowledge, limited pedagogical content knowledge (PCK), inadequate understanding of problem-solving skills, and low self-efficacy (e.g. Appleton, 2007; Traianou, 2006). Van Aalderen-Smeets, Walma van der Molen, and Asma (2012) found that teachers with a less positive attitude towards science spend less time on teaching it and have lower confidence; use more traditional, teacher centred, approaches to teaching; and are less able to foster positive attitudes in their students.

At the same time, Appleton (2002) found that teachers see science activities as more appealing when these are part of an integrated, thematic approach with a perspective that encompasses more than just science. An integrated approach in which time is shared with other subjects such as reading or calculus would also increase the time effectively available for science and technology in primary school and draw more attention to the subject. Moreover, there are indications that integration may improve learning outcomes in both of the combined subjects (Vars, 1996).

Our endeavour in this paper is to provide a systematic overview of the possibilities, typology, merits, and difficulties of implementing integrated curricula in primary schools in order to stimulate science and technology.

Integrated curricula are not new. Especially in middle and high school settings, there is a considerable amount of literature on integration (e.g. Beane, 1997; Czerniak, 2007; Drake, 2007; Rennie, Venville, & Wallace, 2012b; Venville, Wallace, Rennie, & Malone, 2002). Primary education, however, has its own unique characteristics. Unlike secondary teachers, primary school teachers are usually generalists and teach all subjects including literacy, mathematics, social studies, and science (Appleton, 2007). Being a generalist with no specific tertiary education in science influences teachers' development and practice (Mulholland & Wallace, 2005).

Hence, we carried out a review focussing on recent empirical work on the integration of science and technology in primary school curricula, aiming to describe possible ways to proceed, as well as to describe the hindrances and affordances in the quest to increase attention on science and technology in primary school. To assure the ecological validity and practicality of the results, we used a focus group involving researchers and teacher educators.

Some remarks need to be made on terminology and the educational domain we focus on. We will use interchangeably the terms *science, technology*, and *science and technology*. Not all countries have the same traditions in teaching science and technology. England and the U.S.A. teach science and technology (engineering) as separate subjects. In other countries, such as the Netherlands and France, science and technology belong to the same domain in primary education (Rohaan & Van Keulen, 2011). There also are differences in curriculum standards and in the aims of science, technology, or science and technology. Although we recognize these differences (cf. Lewis, 2006), we assume they are of minor interest with

respect to contributing to positive attitudes towards science and technology at an early age through integrated curricula. Hence, we include in our review all studies focusing on integrated science, integrated technology, or integrated science and technology. In addition, the transition from primary (or elementary) education to secondary education does not take place at the same age in all countries. In most countries primary education ends or has ended at age 12, and we have therefore focussed on studies that concern students up to 12 years old.

Theoretical Framework

The curricular integration of subjects such as science has been a subject of research since roughly 1942, when Aiken (1942) published his so-called 'eight-year study', an extensive research project on curricular integration. Since then, many scholars have written on integration, although the term, *curriculum integration* was not always explicitly used. Wraga (1996) described various integration projects in a chronological overview. He reported on studies that used key words such as *general education*, *core curriculum*, *block time*, and *interdisciplinary*. A key review was conducted by Vars (1996). His main conclusion was that curricular integration generally had moderate to positive effects on students' learning results. He could not, however, review enough research to form conclusive evidence. More recently, Vars and Beane (2000), Hinde (2005) and Drake (2000) reached a similar conclusion: they hinted at benefits but indicated that there were still too few research reports on integration's efficiency and effectiveness. Drake (1998, 2000) was mildly positive about the effects of integrated curricula, although she also struggled with the limited number of suitable empirical reports. She concluded that the integrated curricula led to increased learning, boosted motivation in teachers and students, a better understanding of science concepts, and the increased use of higher-order thinking skills. George (1996) was more critical and called for caution when considering integrated curricula, finding no certainty for such claims.

Review studies focusing on integrated science education have also struggled with a small number of empirical studies, much in line with the general picture. An early review by Haggis and Adey (1979) collected data on 130 courses and projects identifying trends in integrated science education. Czerniak, Weber, Sandmannand, and Ahern (1999) called for more research to verify the widely claimed benefits of integration of mathematics with science and for research results that could be used to inform school-based practice. Gavelek, Raphael, Biondo, and Wang (1999) looked at integrated science and literacy instruction but were surprised by the small number of 'data-driven' research reports. For integrated science and mathematics curricula, Hurley (2001) quantified student results from 31 studies, mostly at the high school level. This meta-analysis reported small to medium effect sizes for science and mathematics achievement. In order to help synthesize the various findings, Czerniak and colleagues advised constructing a 'coherent and concise definition of curriculum integration' (Czerniak et al., 1999).

Findings with respect to cognitive learning outcomes of integrated curricula appear to have drawn upon the results of standardized achievement tests that focus on knowledge. Empirical evidence on other learning effects such as skills development could, therefore, hardly be included in the reviews currently available. Still, there is a growing call from researchers (Orpwood, 2007) and teachers (Levitt, 2002) for teaching and assessing higher-

order, cognitive skills development, often described as *21st century skills* (cf. Dede, 2010), and skills and knowledge related to situational issues and practical problems. In establishing student learning effects resulting from integrated curricula, it is therefore important to pay attention to more than the results on standardized tests (Rennie, Venville, & Wallace, 2010).

This measurement issue concerning the effectiveness of integrated curricula coincides with the problem of defining what the term, *integration* means (Rennie et al., 2012b). Czerniak (2007) articulated the problem further: 'At the fundamental level, a common definition of integration does not seem to exist that can be used as a basis for designing, carrying out, and interpreting results of research'(p. 542).

In the literature on integration that has a broader scope than primary science and technology, several approaches to integration that are helpful in constructing a framework that can guide our review have been described and distinguished (Beane, 1997; Drake, 2007; Fogarty, 1991; Haggis & Adey, 1979; Harden, 2000; Hurley, 2001; Venville, Wallace, Rennie, & Malone, 1998).

The idea of distinguishing kinds of integration has been subject to significant debate. For Beane, only curriculum planning that 'is done without regard for subject-area lines' (Beane, 1997, p. 10) could be labelled as integration. In his view, integration was always organized around problems in the real world that involve the application of knowledge. To him, the point was to focus on the problem at hand and not on covering standardized subject matter. In contrast, Venville and colleagues (e.g. Venville et al., 2002) pointed at the continuum between various approaches. They stressed that no single approach was a more authentic form of curriculum integration than another. A too narrow definition of integration could hinder progress by excluding potentially powerful approaches.

In constructing our framework, we have attempted to synthesise various taxonomies. Venville, Rennie, Wallace, and Malone in various studies (e.g. Venville et al., 1998; Venville, Wallace, Rennie, & Malone, 1999) since 1998 have referred to the different approaches to integration they encountered by using six terms that teachers themselves use: synchronized, thematic, project-based, cross-disciplinary, school-specialized, and community-focused. These different types of integration differ in terms of whether subjects are taught separately versus together (Rennie, Venville, & Wallace, 2012a).

In their review, Haggis and Adey (1979) focussed on integrating various science disciplines, for example biology with physics, and they distinguished three levels that refer to the intensity of integration: coordinated, combined, and amalgamated. In their approach to integration, the boundaries between the sciences gradually disappear, just as the word amalgamated suggests.

By means of 'constant, comparative analysis of the qualitative data', Hurley (2001, p. 263) identified five levels of integration: sequenced, parallel, partial, enhanced, and total, by looking at the integration of science with mathematics and drawing primarily on data from secondary education,. In sequenced integration, the teaching of science and mathematics is planned sequentially. Parallel integration involves the simultaneous teaching of the subjects through parallel concepts. When the disciplines are taught both separately and together, Hurley spoke of partial integration. Enhanced integration means that either science or mathematics is the dominant subject of the lessons. The most encompassing level of

integration Hurley identified is total integration in which both subjects are taught together and in balance.

For our review, we required a framework that did justice to the science integration in primary school, and we required classification criteria that could be decided upon in retrospect on the basis of analysing materials and reports.

Therefore, a typology that draws on the categorization of teachers (Venville, 1998), although inspirational, cannot be directly applied by scholars unacquainted with the corresponding teaching practice nor can typologies that focus on integrating sub-disciplines within science and/or technology (Haggis & Addey, 1979) because in primary school the challenge is to integrate science with non-science subjects. In addition, Hurley's classification is not applicable because it draws on the presence of distinct subject matter teachers, which is atypical for primary education.

On the other hand, the typologies of Venville, Rennie, and colleagues (1998), Haggis and Adey (1979), and Hurley (2001) all share the idea of characterising an integrated approach in terms of 'dissolving the boundaries between the subjects' and the 'extent to which the subjects remain (in)distinguishable'. In line with this, we have based our framework on the complexity of the integration, that is, on whether particular curricular components (e.g., aims, materials, and exercises) are shared over the subject.

Figure 1 illustrates a common visualization of integration types. We have defined the steps as complexity steps, employing commonly used names that these levels of complexity (for criteria, see Tables 1 and 2). In this context, complexity means that more elements of teaching are shared between subjects, for example, goals, lesson tables, exercises, explanations, tests, and grades. Hence, the higher forms of integration are more comprehensive. Although the metaphor of a staircase, or ladder may convey the message that the top is the 'best' approach to integration, the classification in fact is purely descriptive. The intuition that more comprehensive forms of integration are better by definition, is not warranted by research. Venville and colleagues stated that they 'could not say that some were better, merely that they were different' (2002, p. 50).

Another association that the complexity staircase may carry is that it represents stages of the development towards an integrated curriculum. Several scholars refer to long and difficult processes to develop an integrated curriculum that functions well in school (Chin & Brown, 2000; Drake, 2000, 2007; Fogarty, 2009; Hackling & Prain, 2008; Hurd, 1998). Burns (1995) called this the evolution from traditional to fully integrated curricula. Even though less complex forms of integration may serve as pilot or pioneer projects, we regard the choice of any form of integration as a pragmatic decision to be based upon available resources and the specific learning goals to be achieved. It is our aim to contribute to informed decision-making with a thorough and conceptually coherent review.

Do not print or distribute without permission from the author.

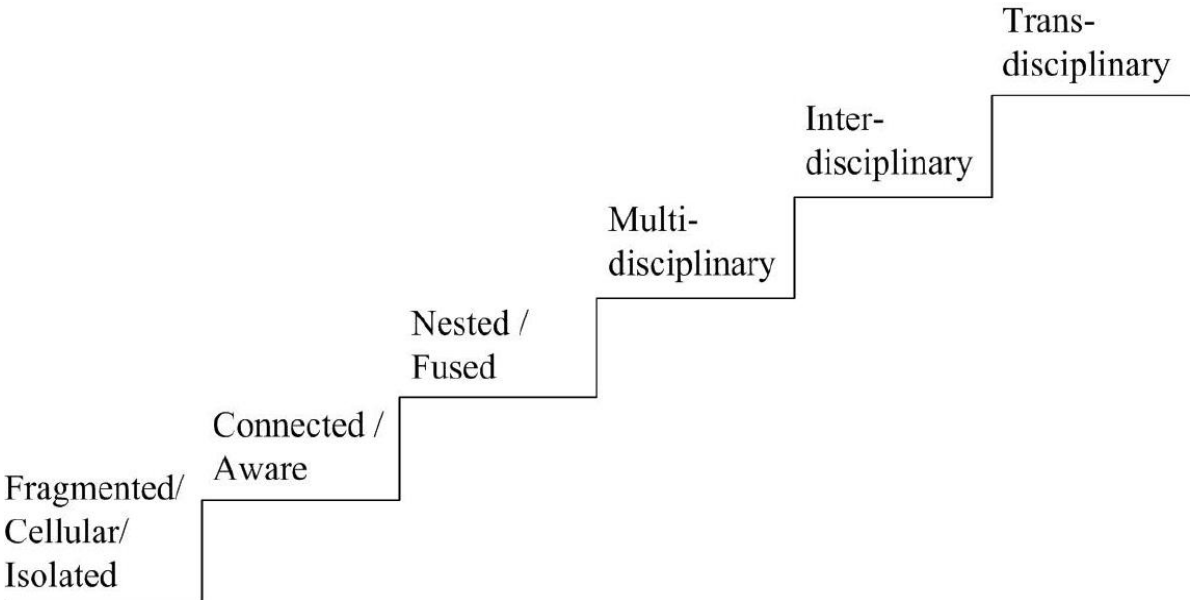

Figure 1: Different approaches to integration as a hierarchy on a complexity-staircase (composed on the basis of: Burns, 1995; Drake, 2007; Fogarty, 1991; Harden, 2000; Jacobs, 1989; Van Boxtel, 2009)

The types of integrated curricula that are indicated in Figure 1 are defined in Table 1. Researchers sometimes use a different name for the same level of complexity of integration or they use the same name for different levels of complexity. We mention the various names used in the literature, while our choice is identified in this section by the use of italics. In a *fragmented* (Fogarty, 1991), cellular (Fogarty, 2009), or isolated (Harden, 2000) curriculum, all disciplines or subjects are taught separately. The subjects have their own place on the lesson table, and in the time allotted, the goals of that specific discipline should be met. The next step is the *connected* (Fogarty, 1991, 2009) approach. Here, the teacher tells the students what the connection is between, for example, yesterday's mathematics lesson and today's science lesson. Making connections is a teaching activity, not a responsibility of the students. It is the teacher who consciously directs the students to the overlap and connection between the subjects. The goals are still attained in the time scheduled for the various separate subjects. The intermediate approach to integration is called *nesting* (Fogarty, 1991, 2009) and fusion (Drake, 2007). In this approach to integration, the goals for one subject are completely nested within the teaching of another subject. For example, language acquisition can be fused with history lessons through reading (and thus learning) about history during language lessons. In a similar way, mathematics can be nested by explaining mathematical formulas within the context of science lessons.

The next step is *multidisciplinary* (Drake, 2007; Harden, 2000). In this approach to integration, two or more subject areas are part of the same theme, a real-life problem, or a project. The individual disciplines have their own goals, but the content and the context of the teaching are matched to meet the demands of both disciplines.

In more comprehensive approaches to integration, such as *interdisciplinary* (Drake, 2007; Harden, 2000) and *transdisciplinary* integration (Burns, 1995; Drake, 2007; Harden, 2000), any reference to individual subject areas has disappeared, and the learning goals are

defined in terms of cross-disciplines. The skills and concepts that are related to the themes transcend subject-specific skills and knowledge. Transdisciplinary teaching is characterized by a student-centred, real-world context whereas interdisciplinary curricula use teacher-developed themes or projects as a starting point.

Table 1: summary of approaches to integration

Name	Description
Isolated / cellular / fragmented	Separate and distinct subjects or disciplines. Often viewed as the traditional way of teaching.
Connected / aware	Explicit connection is made between the separate disciplines, deliberately relating subjects rather than assuming that students will understand the connections automatically.
Nested / fused	A skill or knowledge from another discipline is targeted within one subject/discipline. Content from one subject in the curriculum may be used to enrich the teaching of another subject.
Multidisciplinary	Two or more subject areas are organized around the same theme or topic, but the disciplines preserve their identity
Interdisciplinary	In the interdisciplinary course there may be no reference to individual disciplines or subjects. There is a loss of the disciplines' perspectives, and skills and concepts are emphasized across the subject area rather than within the disciplines.
Transdisciplinary	The curriculum transcends the individual disciplines, and the focus is on the field of knowledge as exemplified in the real world.

A clear definition of what integration is, how it is designed and carried out, and what results are to be expected is helpful in making an informed decision about curriculum reform. The complexity staircase provides a powerful, descriptive classification scheme that can help to solve Czerniak's (2007) *definition problem*, and it can be used to compare one program to another (Rennie et al., 2012b). Individual studies on integration involving science and technology in primary school usually do not use this framework, but they can probably be characterized in these terms.

On Educational Innovation

The generic literature on the success of educational innovations (Ely, 1990; Fullan, 2001; Pinto, 2005) has investigated various factors related to the success or failure of an educational innovation, such as the need for change, continued support by the school administration, critical mass, clarity of goals, and the quality of the programs. Several of these aspects, combined with components such as learning activities, the teacher's role, assessment, time, and aims and objectives, make up the school curriculum (Hattie, 2003; Thijs & Van Den Akker, 2009). It is clear that the complexity of a new educational approach will relate to many of these factors. Generally speaking, small and relatively simple innovations are less demanding for staff, administration, and so on. Therefore, complexity may be critical to implementation.

Do not print or distribute without permission from the author.

The literature has also stressed the pivotal role that teachers play. When teachers do not adopt the innovation, it will fail. The teachers' motivation for and commitment to the innovation are needed. It is important the project's aims match the teachers' personal aims (Vos, 2010). The innovation should be understood and recognized as realistic and worthwhile. It should have value in the eyes of the teachers (Wopereis, Kirschner, Paas, Stoyanov, & Hendriks, 2005). To achieve this, teacher support and professional development (PD) are crucial. Furthermore, teachers should build up a sense of ownership in the innovation (Vos, 2010, p. 18). One way to do this is to involve them in designing the classroom materials.

Research Questions

This study has aimed to evaluate empirical results on integrated science curricula in primary education and to describe the hindrances and affordances of integrated curricula in such a way that the findings can guide informed decision making processes undertaken by schools and teachers. We have proposed the complexity staircase framework to classify integration projects in a way that relates to the trade-off of integration efforts made. We have focussed on learning results, on the one hand, and factors that contribute to or hinder success on the other, in particular, those that concern the role of the teacher. Our aim has been to shed light on the kinds of integration to be used in particular circumstances, the learning outcomes to be expected, and the type and amount of effort that is needed.

The research questions are:

(1) What effects of integrated science and technology curricula in primary school are reported? In particular:
    (a) What are cognitive learning effects?
    (b) What are affective learning effects?
    (c) What effect on the time spent on science and technology education has been reported?
(2) What factors contribute to or hinder the success of integrated science and technology in primary school? In particular:
    (a) teacher commitment
    (b) teachers' PD
    (c) teacher support
    (d) problems in implementing integrated curricula

Method

In this study, we analyse the recent literature on integration. In an early stage, it had already become clear that there would not be enough material to perform a true meta-analysis. Therefore, we performed a review, in which we have focussed on quantified learning results from tests on knowledge and skills, as well as, on attitude measurements. A focus group study involving researchers and teacher educators was performed. By bringing in their

expertise, we broadened the empirical basis. The group also contributed to the validity of our analysis and conclusions and helped to ensure its relevance for school practice.

Review Setup

The first step in the review study was finding and selecting the projects to be analysed. We choose projects as a unit of analysis. Experts were asked for their suggestions on projects, and literature was collected from our own previous research as well as through elaboration on the keywords and authors in the review studies mentioned above. We searched using Google Scholar, employing various key words and their combinations. Examples include *integration*, *integrated*, *science*, *technology*, *primary* and *education*; the results were screened by their titles. If we could make no direct decision, we made an additional analysis of the abstract. Lastly, we browsed the reference lists of all of the articles we initially collected. Several research papers referred to a project website, and these websites were subsequently examined for additional research reports. In collecting the samples, we employed various criteria:

- The project concerned the integration of science and/or technology or at least language education or mathematics.
- The project's goal was directly related to integration, e.g., to its design, its implementation, or its outcomes.
- The project focussed on students somewhere between kindergarten and age 12.
- The project reported empirical results of a qualitative or quantitative nature.
- The project's results were reported in 1994 or later.

Project Descriptions

Eight research projects were found that met the selection criteria: GTECH, CORI, PC, WEE, Angles, IDEAS, Seeds/Roots, and Aims. Table 4 provides an overview of all projects included in the review, their main characteristics, their classification on the integration staircase, the available data on cognitive and affective results, and an overview of the sources used for the review. A description of the projects is presented below.

GTECH (James, Lamb, Householder, & Bailey, 2000) is a project in which nine teams of mathematics, science, and technology teachers designed several integrated units over a two-year period while focusing on integrating subject contents across curricular disciplines and implementing ICT in the classrooms. Learning goals were comprised of science concepts, problem-solving, thinking skills, and favourable attitudes toward the involved subjects. GTECH involves age levels that partly overlap with primary education. Their focus is on problem solving and thinking skills, and their inclusion of both science and technology make the project relevant for this review.

Wondering, exploring, and explaining on the part of primary school students are at the core of the integrated reading and science project ,'WEE science'(Anderson, West, Beck, Macdonell, & Frisbie, 1997). Two teachers used the WEE strategy that began with wondering about the content of normal, commercially available books and then deepened the learning

process by exploring such strategies as model-building, microscope work, observations, and experiments.

Concept-Oriented Reading Instruction (CORI) aims at supporting students reading motivation by merging reading strategy instruction and conceptual knowledge in science. The original CORI project began in 1992 and ended in 1997; two follow-ups were realised in 2007 and in 2012. The last project focused on adolescent learning and was therefore not a subject of our study. Over a thousand students were taught in the CORI programmes.

Whereas PrimaryConnections has focused more on science, the CORI project focused more on reading. Over 20 research papers were published in peer-reviewed journals and can be found on their website. For our analysis, a meta-study by Guthrie (Guthrie, McRae, & Klauda, 2007) was our key source.

The project placed daily reading instruction in the context of a science subject using commercially available books. Their goal was to increase reading motivation and engagement and to foster conceptual knowledge development in science at the same time (Guthrie et al., 2004). Guthrie reported the following claims as the rationale behind the twelve-week CORI project: '(a) Engagement in reading refers to interaction with text that is simultaneously motivated and strategic, (b) engaged reading correlates with achievement in reading comprehension, (c) engaged reading and its constituents (motivation and cognitive strategies) can be increased by instructional practices directed toward them, and (d) an instructional framework that merges motivational and cognitive strategy support in reading will increase engaged reading and reading comprehension'.

PrimaryConnections aims at linking science with literacy'. It is an innovative approach to teaching and learning to enhance primary school teachers' confidence and competence in teaching science. PrimaryConnections (PC) has introduced curriculum resources and a professional learning program for teachers in three stages in Australian primary schools. Stage 1 in 2003 began by framing a conceptual model of integrative science learning and teacher professionalization (Hackling, 2007; Hackling, Peers, & Prain, 2007); that model was tested in 56 trial schools in stage 2 (Hackling & Prain, 2005); and it was expanded into a nation-wide effort in stage 3 (Dawson, 2009). So far, 23 curriculum units and a professional learning program have been developed and tested. These can be found on their website along with a collection of research reports and background materials.

PrimaryConnections adapted Bybee's 5E model (Bybee, 1997), in which students 'Engage, Explore, Explain, Elaborate and Evaluate'. PrimaryConnections uses this constructivist and inquiry-based approach to link science with literacy. It emphasizes that students who are in the process of learning science will use verbal and visual representations to talk, discuss, and visualize science concepts. There was an emphasis on science and on the 'literacies of science', such as representing and communicating science concepts, processes, and skills. The focus on science and the 'literacies of science' arose because the project originated as an answer to concerns about the status and quality of science teaching in Australian primary schools.

Do not print or distribute without permission from the author.

Munier and Merle (2009) studied the interdisciplinary mathematics and physics approach of teaching the concept of 'Angle'. Three teaching sequences were developed, refined, and tested in grades 3, 4, and 5. Starting from a real-world context that was meaningful for students, the sequence intended to facilitate the learning process of geometry concepts.

Central to the project, IDEAS is an instructional model designed to accelerate primary school student achievement in science, reading comprehension and writing. Using the so called 'In-Depth Expanded Applications of Science' model (IDEAS), the project combines reading and science education. The project has expanded from a classroom setting with three teachers (Romance & Vitale, 1992) to 51 teachers (Romance & Vitale, 2001). A scale-up study began in 2002 and investigated even more schools (Romance & Vitale, 2008). The above-mentioned papers were selected for this review because they provide a good overview of the complete project. Many additional materials can be found on the project's website.

The IDEAS project has focused on implementing a schedule that earmarks 1½ to 2 hours daily for science with integrated reading and writing activities across grades 3–5. The project intends to solve the problem of a lack of adequate instruction time for science by replacing a block hour of reading or language instruction with one that integrates language instruction or reading with in-depth science instruction. Attention is paid to both hands-on science activities and the reading of science books and journal writing.

The rationale behind integrating science and reading stems from the conviction that reading skills and science thinking skills overlap and increase attention on content reading as a learning aim, so that most applied reading goals are incorporated into in-depth science reading (Romance & Vitale, 2001).

Seeds of Science/Roots of Reading is a curriculum that integrates science and literacy in order to provide access to in-depth science knowledge, academic vocabulary, and powerful skills and strategies in both literacy and science. The Seeds/Roots project is a large-scale project with the goal of integrating of science and literacy. In 2003, the first steps were taken, which led to a field test including 25 teachers in 2004–2005 (Wang & Herman, 2005). After this initial start-up, over the next two school years, 100 teachers per year participated in the research project (Goldschmidt & Jung, 2011a, 2011b). Publications on the background and the results of the project can be found on the website. Twelve curriculum units integrating science and literacy have been developed and tested, partially building upon the products and experiences of the Great Exploration in Math and Science (GEMS) project. In order to deepen learning in both science and literacy, the Seeds/Roots project is based on three guiding principles: 'Engage students in first-hand and second-hand investigations', 'make sense of the natural world', 'employ multiple learning modalities', and 'capitalize on science-literacy synergies' (Lawrence Hall of Science, 2012). Students read and investigate, thereby triggering process skills such as predicting, classifying, and interpreting, which are vital for both reading and science and which contribute to meta-cognitive skills.

Activities Integrating Math and Science (AIMS) is a program that provides opportunities to acquire scientific and mathematical knowledge and skills through student-centred inquiry and discourse based approach. Although this project started in 1981 and a research paper about

the results appeared in 1994, we have nonetheless incorporated it into the analysis because the project has continued to develop since then. There is an active website (http://www.aimsedu.org) with educational materials and a newsletter with current updates. The initial materials were developed with the assistance of 80 teachers; since then, more than 75 books with activities have been produced, and thousands of teachers have participated in workshops. Its integrated activities and corresponding model of learning are based on students counting and measuring during hands-on real world experiences, recording the measurements, and then writing about them. Illustrating the findings with graphic representations leads to abstract thinking in which higher-order thinking skills such as hypothesizing, generalizing, and analysing are used (Berlin & Hillen, 1994).

Determination of type of integration

On the basis of various project sources, such as scientific publications, project websites, and curricular materials, the projects were categorized according to the determination scheme in Table 2.

Table 2: curriculum integration type determination scheme

Step 1	○ The content of the lessons is taught by separate teachers or the content of the lessons is about one subject ⇒ connected
	○ Two or more subjects are incorporated in the same lesson ⇒ nested / multidisciplinary / interdisciplinary / transdisciplinary
Step 2	○ Each subject has its own (set of) learning goals ⇒ nested / multidisciplinary (go to step 3)
	○ The (set of) learning goals transcend(s) the individual subjects ⇒ interdisciplinary / transdisciplinary (go to step 4)
Step 3	○ One of the subjects is dominant over the other (as indicated by the learning goals) ⇒ nested
	○ The subjects are equally important ⇒ multidisciplinary
Step 4	○ The learning goals are (predominantly) taken from subject curricula or schoolbooks and/or are teacher orientated ⇒ interdisciplinary
	○ The learning goals predominantly include solving real world problems and/or are student orientated⇒transdisciplinary

The first author analysed the available materials, selected key elements of the project descriptions from the various sources on each project, and then presented them to the other authors. For every project, all steps of the identification scheme were discussed by referencing all of the project's available sources until a consensus on the project's integration approach was reached. The type determinations are also listed in Table 4, which represents an overview of the projects.

Do not print or distribute without permission from the author.

Analysing the Projects

Our evaluation of the effects of the selected projects (research question 1) focused on four factors:

(1) The effects of cognitive learning on both knowledge and higher-order thinking skills in the field science/technology and in the complementary school subject integrated
(2) Attitudes of students toward science/technology and toward the other school subjects integrated
(3) The effect on the amount of time students spent on science/technology
(4) Questions and problems highlighted in the materials analysed

Five projects were quite comprehensive, and multiple sources for them were available. Documentation typically comprised teaching materials, teacher guides, a website, several (research) papers, and additional documents describing the project. For three projects, documentation comprised just one research paper. All documents were imported into the computer program Atlas.ti to support the qualitative analysis. Atlas.ti allows for the systematic coding of relevant sections and quotes in the documents (Muhr & Friese, 2004).

When considering learning effects and attitudes, we first looked for statistical estimates of the acquisition of knowledge and skills reported in the studies. Care was taken to account for the kind of information provided on a particular variable. It may have been tested on the basis of the students' (or teachers') perception, or else, may have been based on classroom observations. Some studies used indicators like 'the number of positive remarks on the lessons'. Occasionally, the measurement was merely a claim supported by argumentation. We used these various sources of qualitative information to enrich the collected data.

Not all research projects reported on all four types of learning effects, and the studies varied in the way they reported, in particular, on effectiveness. Some projects reported on students and others on teachers. Sometimes there were qualitative data; other projects gathered a large pool of data that allowed them to report quantitative results. In table 4, the effects are listed separately. Where hard data were available, we presented them; additional claims are presented in a separate row.

To answer the second research question, we searched for phenomena that helped teachers create, or hindered them from creating, effective integrated education. We focused on teacher commitment, teacher PD, and the various kinds of support provided to the teachers. In addition, we analysed the projects for reported pitfalls and problems. The methodological approach we employed was a qualitative review. After systematically studying the projects, we listed the various results on teacher motivation and commitment, and based on these we formed conjectures. After discussing the conjectures with the focus group, we went back to the material to systematically review all of the data supporting or opposing the conjectures (Gravemeijer, 2004).

Do not print or distribute without permission from the author.

Focus Group

To support our analysis and interpretation of these projects, two focus group interviews were conducted in order to deepen and validate the literature analysis (Morgan, 1996; Morgan & Spanish, 1984). Morgan (1996) defined a focus group as 'a research technique that collects data through group interaction on a topic determined by the researcher'. The group begins with a question raised by the researchers. Through discussion, the group may raise additional questions, make comments on assumptions, and advise on particular matters to examine or form hypotheses on the research questions, thus helping to deepen the analysis.

In general, it is advised that focus groups be heterogeneous in order to create a rich, multi-perspective discussion and to avoid biases. Our focus group was comprised of four (associate) professors and/or researchers in science and technology education, four (associate) professors and/or researchers in (primary) education, and four teachers and/or educators.

Two group conversation meetings were organized. In the first session, the demands on the categorizing framework were discussed. Based on their expertise, the focus group's discussion contributed to the definition of the various integration types for primary education (Table 1) and the type determination scheme used to classify the projects (Table 2). The focus group was also very supportive in reflecting on the review and in valuing the effects reported in the various projects (research question 1). A verbatim record of the meeting's content was sent to the group members to ensure correctness.

In the second meeting, the focus group discussed the preliminary review results, focusing mainly on factors that may have helped or hindered the teachers (research question 2). In order to verify the tentative conclusion, the group members were asked to discuss our preliminary findings' feasibility, practicality, and soundness. The group members discussed how their experiences with integration related to our preliminary model, thereby enriching the available information on the integration approach. A written report on the focus group discussions and their main conclusions was sent to the participants to validate factual information on the projects.

The focus group members were also individually asked to complete a series of open questions on the general aim of this study and 'the possibilities of and difficulties in establishing integrated science/technology curricula as a way to promote science and technology in primary education'. The personal answers were clustered and used as a background and reality check for interpreting the results of this study. This is presented in the discussion section of this paper.

Results

Reported Effects

The first research question concerned the cognitive effects, the affective effects, and the effects on time spent on science and technology of the various integration.

Do not print or distribute without permission from the author.

Cognitive learning effects.

Cognitive learning effects on science/technology were reported in seven projects and were predominantly positive. CORI, Seeds/Roots, and IDEAS used an experimental setup with control groups; PrimaryConnections provided results based on a large-scale survey; and WEE, AIMS, and Angles collected and analysed student and teacher claims about the project.

On the basis of a meta-analysis of 11 studies, CORI reported a significant improvement of treatment groups over control groups, with an effect size of 1.34 for knowledge acquisition (n = 502). In the meta-analysis, one study reported on science inquiry skills (n = 98), and an effect size of 0.57 was reported.

The PrimaryConnections project presented indirect measures. Among teachers, 87% believed that 'science learning improved'. Students in experimental classrooms were 'twice as good in representing science results' than students in control groups. PrimaryConnections also reported that 'more students' could identify the variables in an investigation. In a survey (n = 538), approximately 70% of the students indicated that they learned lots of science during the tested curriculum.

Students in the WEE project were asked to report on what they learned during the integrated lessons. The students reported 177 declarative knowledge claims (for example, 'I learned about . . . ' or 'I learned that. . . ') and 17 procedural knowledge claims (such as, 'I learned how . . . '). However, the researchers express concerns with the number of science misconceptions that students listed in their final evaluation.

The Angles project focused on teaching methods and not on student outcomes. The authors of the studies on the project claimed that the integrated teaching approach leads to knowledge development in the domains of both mathematics and physics, and that the students developed modelling skills.

In the IDEAS project, science understanding was reported to have increased. Science achievement in IDEAS classrooms was the equivalent of 0.93 to 1.6 school grades better than in control classrooms. Classroom observations indicated that the quality of questions asked by the students improved as well as their ability to explain science concepts in terms of classroom science experiments and real-life applications. An evaluation by independent researchers of the Seeds/Roots project revealed significant positive results ($p < .05$) on the understanding of the content and nature of science. Teachers report the on-going development of skills and cognitive abilities like observation, categorization, question asking and using data.

The AIMS project teachers evaluated the outcomes of the learning process through an observation protocol focusing on student activities that revealed acquiring science knowledge and skills, affective learning results, or social competencies. The teachers had been previously trained to use it. Their collected outcomes were divided into three categories: cognitive, affective, and social. Most outcomes concerned science related cognitive results: 423 in total. These outcomes were further divided in categories based upon Bloom's Taxonomy. The first two levels, knowledge and comprehension, contained 297 outcomes and were characterized by statements such as these: 'recalled prior knowledge to solve a problem', 'able to record and interpret data', 'showed some understanding of concept of …', and 'could explain their thinking'. As for the higher-level competencies in Bloom's

taxonomy (application, analysis, synthesis, and evaluation), 126 outcomes were registered. These were characterized by the following types of statements: 'Made real-world connections', 'spontaneous comparing and contrasting', and 'knew when their data [were] faulty'. So, the AIMS teachers reported a substantial number of learning outcomes related to higher-order, 21st-century learning skills.

For results concerning reading, three projects reported specific measures. CORI reported an effect size of 0.9 for reading comprehension (n = 98) with standard reading comprehension tests used in a quasi-experimental setup with pre- and post-tests and control groups. The IDEAS project reported on reading achievement over a multi-year period with 51 teachers in all. The experimental groups performed the equivalent of 0.3 to 0.5 grades levels better than the control groups (total n = 1200).The Seeds/Roots project reported on student vocabulary and found that treatment groups scored significantly higher than control groups, with an effect size of 0.38 (n = 1483) and 0.23 (n = 1950). The Seeds/Roots project reported no significant learning effects for reading and writing.

Affective learning effects

Most projects have indications and qualitative descriptions on students' attitudes. CORI reported effect sizes to describe their findings, PrimaryConnections provided results based on a large-scale survey, WEE used a student questionnaire, AIMS analysed comments the teachers gathered, and IDEAS offered only indirect claims.

The CORI project reported an effect size of 0.3 for reading motivation when comparing experimental classes with control classes, comprising over 1000 students in total.

In PrimaryConnections, students (n = 538) completed an anonymous survey in which they had to compare their experience of science in the PrimaryConnections curriculum with their experiences of the standard science curriculum. For the question, 'Have you enjoyed science this term?' on average, less than 8% of the students indicated that they did not enjoy science in the experimental conditions.

From a questionnaire used within the WEE project, 70% of the students (n = 44) reported that they liked the project, its explorative section in particular, and 50% disliked nothing in the project. The majority of the other 50%, who did dislike something in the project, focused on matters that did not concern the curriculum, such as 'the video cameras in the classroom'. A small group of students did not like 'explaining their findings to each other'. The figures reported indicate an overall favourable attitude toward the project in general and toward the science section in particular.

IDEAS reported 'increased confidence and motivation', as well as 'active classroom participation', indicating 'high interest in and motivation to learn science concepts'. Parents reported that their children were, for the first time, enjoying reading their textbook.

In a Seeds/Roots case study of six classrooms, teacher interviews revealed that students were really interested in learning and loved the hands-on experience, and students even reported that science was their favourite subject. It was reported that students 'held their interest for reading even for challenging books' and that 'there was not one bored person in the class.'

Do not print or distribute without permission from the author.

The AIMS project did not differentiate between attitude effects in science and language. The teachers in the project collected 234 affective outcomes through the observation protocol. These outcomes were divided into three categories: (a) attitudes toward mathematics and science (e.g. 'looked forward to doing science' and 'actively engaged in learning'), (b) dispositions/habits of mind (e.g. 'desire to know more' and 'high level of excitement') and (c) self-efficacy (e.g. 'proud of what they had accomplished' and 'wanted to keep working when it was time to quit'). From this, it was said that 'teachers report many positive learning outcomes regarding attitudes towards science and mathematics'. The teachers indicated that these positive attitudes seemed to be a prerequisite to an effective learning environment.

Effects on time spent on science and technology

Four of the eight projects explicitly reported that the time spent on science and technology during the use of the integrated curriculum effectively increased. Seeds/Roots used a control-group setup, and PrimaryConnections reported results of a large scale survey, WEE provided only indirect information. The IDEAS and CORI project design required specific time investments. The other projects did not report on this issue.

The connected project, GTECH, was effectively carried out within the context of the science lessons alone. Moreover, since the mathematics teachers withdrew from the project, the whole unit had to fit into the time allocated for science. This indicates that for GTECH, the time spent on science did not increase and possibly even decreased.

In PrimaryConnections, the participating teachers indicated that the time spent on science increased. Measured in 91 classrooms, it was found that the number of classes in which less than 30 minutes a week were spent on science decreased from 27% to 11%. The number of classes with 30 to 60 minutes of science a week decreased from 41% to 27%, and classes that spent more than 60 minutes a week on science increased from 31% to 62%. In addition, the quality seemed to improve because PrimaryConnections teachers reported that science was taught more often in the morning when normally the high-priority subjects are taught.

The WEE project reported that students talked with their families about WEE three times on average during the course, and that all of the students indicated that they liked talking about WEE. This indicates not only a favourable attitude toward science, it also indicates that the time spent talking about science in a non-school situation had increased.

In the IDEAS project, 1½ to 2 hours a day that were normally spent on language and reading were reserved for the project, hence, time for science increased.. Classroom observation in the IDEAS project revealed that at least 30 minutes of that time was spent in hands-on activities, experiments, or demonstrations.

The CORI project brought about a similar change. During the 3 to 8 months of the CORI project, this was the only form of reading and language teaching that the students had, and the reading and language training of the students in this period was dedicated to science topics. Twice a week, the dedicated, oral-reading fluency time was spent on hands-on activities or the study of science concepts. In the Seeds/Roots project, teachers who were using the project materials spent approximately 50% more instructional time on the science

unit than the control group teachers using the standard unit. The control group teachers (*n* = 35) spent around 180 minutes on science while the treatment group (*n* = 38) spent 270 minutes on science. Of that time, one third (for both treatment and control groups) was spent on hands-on activities.

In Table 3, we have summarized the reported effects. Within the cognitive and affective effects we have distinguished between effects on science and technology and effects on the complementary subject. Within the cognitive effects, we have differentiated between effects on knowledge and effects on higher, 21st-century thinking skills. In the table, we have distinguished between negative results (−), no results (0), weak positive results (+), and strong positive results (++). Strong positive results, for example, have effect sizes of higher than 0.8 or an increase in student performance equivalent to 0.5 grade level or more.

In the nested approach to integration, we distinguished between the projects that focussed on language (CORI and WEE) and the project that focused on science (PrimaryConnections). In PrimaryConnections, a large amount of effort was put into the science section of the integrated subject.

Table 3: summary of reported cognitive, affective and time effects of integration projects categorised according their integration approach

Approaches to integration	**Connected**	**Nested (language)**		**Nested (science)**	**Multi-disciplinary**		**Inter-disciplinary**	**Trans-disciplinary**
Project name	**GTECH**	**WEE**	**CORI**	**PC****	**Angles**	**IDEAS**	**S/R****	**AIMS**
Cognitive effects								
Science knowledge	0	−	+	+	+	++	+	++
Thinking skills	0	0	0	+	+	+	+	++
Other subject	0	+	+	0	+	+	+	n.a.*
Affective effects								
Science	0	+	+	++	0	+	+	++
Other subject	0	0	0	0	0	+	+	n.a.*
Time effects on science	−	+	0	++	+	+	++	0

note: negative results (−), no reported results (0), weak positive results (+), and strong positive results (++)
*n.a.: in transdisciplinary projects the subjects are integrated to such an extent that separate measurements of the subjects is no longer useful.
**PC: PrimaryConnections project S/R: Seeds/Roots project.

Factors that Contributed to or Hindered Successful Implementation

The second research question concerned factors that contributed to or hindered the successful implementation of integrated science. In particular, we investigated teacher motivation and commitment (as in, for example, the resonance of the project's aims with the teachers' personal aims), teacher PD, support offered to the teachers, and problems reported concerning the implementation of integrated curricula.

Teacher motivation and commitment

A qualitative review was performed. Once we had systematically studied the projects, the various results on teacher motivation and commitment appeared to form four categories that

represented four factors underlying teacher commitment. In order to verify the tentative results, our focus group members were asked to discuss the feasibility and soundness of the findings. We then re-examined the data for evidence supporting or opposing the hypothesized factors.

A first important factor that contributed to teacher commitment concerned the aims of the integrated projects. Teachers were described as strongly motivated by student-centred teaching pedagogies where students were actively involved and more likely to attain 21st-century skills. The literature also indicated that teachers felt the need to increase student-centred learning and hands-on activities (Levitt, 2002). The alignment of the project's aims with the teachers' sense of fulfilment when they observed students using and learning 21st-century skills was an important contributing factor.

Projects categorized according to the various steps on the complexity staircase began with the goal of increasing hands-on activities and/or problem solving skills. Furthermore, in all of the projects reviewed, the teachers were stimulated to use hands-on activities, inquiry-based teaching, or problem-solving pedagogies. On the basis of national reports and studies, most projects underlined the importance of scientific literacy: not only reading about science/technology but also acquiring the appropriate skills through inquiry and problem-solving. The multi-, inter-, and trans-disciplinary projects explicitly focussed on subject-transcending goals. AIMS claimed to address higher-order thinking and problem-solving. Angles and Seeds/Roots explicitly postulated that science can support the learning process of the other subject.

The focus group experts also indicated that integrated approaches stimulate higher-order thinking skills and 21st-century skills, for example, an investigative and problem-solving attitude. Although goals related to higher-order thinking skills, 21st-century skills, and subject-transcending goals were mentioned frequently, this does not mean the traditional, subject-bound learning goals that are often more knowledge-focused are unimportant. Most experts suggest a combination of these goals. The members of the focus group recognized the results of the analysed projects as concurring with their experience. Both the experts and our analysis stressed the importance of real-world context and skills.

A second factor that contributed to the teachers' commitment to integrate two or more subjects was being encouraged by the positive effects of the program on student motivation. A nested project such as CORI stressed the importance of a meaningful context for the reading lessons. Students and teachers became, through the integration, more motivated and cognitively stimulated. For CORI, increasing motivation for reading via integration with science was a main goal.

An interdisciplinary project in which reading played an important role was the Seeds/Roots project. In this interdisciplinary project, teacher motivation was present in both subjects. Researchers who studied the Seeds/Roots project reported that teachers found the units overwhelmingly usable, effective, and engaging. Furthermore, the researchers found that the teachers were active and enthusiastic. They reported that many participating teachers expressed enthusiasm about an approach that embraced both science and literacy learning goals, and all teachers said they would use the unit again when they had the choice.

Do not print or distribute without permission from the author.

In the IDEAS project, a multidisciplinary project, experimental-group teachers were initially very reluctant to discard the basic reading lessons, particularly with regard to explaining the curriculum rationale to parents. This concern, however, was overcome early in the school year when many parents voluntarily informed teachers show pleased they were with their children's excitement about classroom science instruction and with their children enjoying, for the first time, reading their textbooks and other science materials at home.

Another source of this favourable expectation was the pedagogical approach taken in the projects. The combined effect of learning by doing and a pedagogy where students used inquiry and problem-solving skills was used in many projects to increase student and teacher motivations in science and technology. The focus group also stressed that science and technology can create a meaningful, authentic context for development of reading competencies. Or, as one of the experts said, 'the world students live in is not divided into separate subjects'.

A third factor that contributed to teacher commitment was the wish to spend more time and attention to science/technology within an already overloaded curriculum. PrimaryConnections, WEE, and IDEAS tried to increase the time spent on science by integrating it with language/reading. Reading about science instead of arbitrary content not only makes the lessons more meaningful but also proves to be time-efficient because the science instruction is completed in part during reading instruction time. AIMS tried to increase attention to science by integrating it with mathematics.

In the GTECH project (connected approach), the time-sharing advantage was far less obvious. Not all sub-projects within GTECH were successful, and mathematics teachers appeared to believe that there was neither the space nor time for the integration of science and technology. As seen above, worries about endangering compulsory curricular goals initially tempered teacher commitment in multidisciplinary approaches to integration. Growing motivation on the part of the children, however, increased teacher motivation. The focus group confirmed this result as an important motivation for integrated approaches to science and technology education.

A fourth factor leading to stronger teacher motivation and commitment was the contribution that integration projects can make to teachers' self-efficacy. The nested project. PrimaryConnections, which had chosen science as a primary focus, reported that 83% of participating teachers (n = 106) had high self-efficacy and that many teachers with long teaching careers who had avoided science until then were teaching it with passion. Other projects on the lower part of the complexity staircase did not report specifically on teachers' self-efficacy, while the interdisciplinary and transdisciplinary projects claimed positive results. In the Seeds/Roots projects, an increase in teachers' (n = 40) science self-efficacy was reported ($p < .01$). Similarly, in the AIMS project, enhanced professional self-concept and teacher enthusiasm were reported. The researchers claim that the teacher-researchers had strong positive feelings about their involvement in the project and that teacher involvement in the project greatly contributed to the teachers' sense of professionalism.

Do not print or distribute without permission from the author.

Teacher professional development

Teacher PD appears to be an important factor in implementing integrated curricula. During its first session, the members of our focus group expressed concerns regarding the teachers' preparation. The group feared a lack of adequate knowledge of science/technology content knowledge (CK) and pedagogical content knowledge (PCK) related to science and technology teaching (Shulman, 1987). They had also expected the teachers to be too focused on their current textbooks and to be uncertain on how to or unable to transform their regular lessons into integrated ones. When teachers are unsure of their own abilities (low self-efficacy), it is unlikely that they will commit themselves to innovative ideas. Teaching materials that clarify and specify the integrated approach and teacher PD may help solve this problem. In addition, the focus group expected that implementing integrated science/technology education would require knowledge of curriculum integration (PK), as well as requiring a change in the teachers' teaching approaches that could conflict with convictions about teaching and attitudes towards science and technology.

The projects roughly reflected the suggested need for teachers' PD. Five of the projects included some sort of teacher PD (GTECH, CORI, PrimaryConnections, IDEAS, and AIMS). These are large-scale integration projects. The nested project, CORI, has emphasised PD with regard to reading, and the connected project GTECH has centred on ICT skills for teachers. Three projects did not have a PD program. Although the Seeds/Roots project did not offer PD, documents recognized the teachers' pivotal role and identified five teacher roles that are crucial for a successful implementation. Moreover, teachers and researchers have stressed the importance of PD in the case of scale-up activities. The WEE and Angles projects did not include a PD program. These are smaller projects, and some informal professionalization was found in their descriptions. In the WEE project, one of the teachers participated in the development of the teaching materials, while in the Angles project, the researchers were present in the classroom, so that there were ample opportunities, for both the teachers and the researchers, for on-the-job training.

When analysing the projects, we identified five common PD themes for teachers. The first was the teachers' beliefs and attitudes towards science/technology education. Four PD programs addressed the relevance of science/technology as part of the curriculum. All programs explained the rationale behind their ideas on 'curricular integration' to the participating teachers via PD programs, teaching guides, or classroom participation.

A second aspect that the projects have in common is their focus on the teachers' knowledge of science and technology (CK), and on domain-related teaching skills (PCK). Understanding the core concepts of the science/technology that was being taught was a recurring theme in the PD programs. In five projects, the teachers' role in facilitating student learning and the teaching competences needed were well-documented. The most crucial ones seemed to be guiding students in inquiry, providing conceptual understanding, engaging students in higher-order thinking skills, and facilitating a student-centred way of learning. Growing familiar and confident with inquiry-based and hands-on teaching activities was part of all five PD programs.

Preparing teachers to implement the materials and the teaching model was a third recurring feature of PD. Teachers and trainers went through the materials together and

identified and solved potential difficulties. Teachers' self-efficacy, sense of professionalism, and sense of ownership were reported to be greatly stimulated because of their involvement in developing their own teaching materials (instead of being confronted with unfamiliar materials).

The fourth common category was developing in assessment skills and procedures. Assessment is of great importance in convincing teachers of a project's value. On all steps on the integration staircase, teachers have reported being afraid that integrated curricula do not comport with standardized testing and the usual focus on literacy and mathematics. Assessment makes students' learning processes and outcomes visible and hence enhances teachers' appraisal of the integration project.

Finally, the PD programs stressed the importance of *follow-up training*. Either a delegation of the project researchers has visited the schools, or follow-up meetings have been arranged.

Teacher support

During the first session, our focus group suggested that teachers need to be provided with new curriculum materials or assistance in developing new materials. When we analysed the projects, it became clear that all of the projects actively assist the teachers, but that the assistance varies from tools that guide teachers in developing new units by themselves to complete teaching units previously designed by a research team. Three projects have the individual teachers construct their own lessons while offering help with the process. IDEAS has employed a development tool that helps teachers to use science as the context for other learning activities such as reading, writing, and concept-mapping. CORI and WEE (nested approach) have employed preselected, commercially available books. The books were selected to be compatible with the specific scientific concepts being taught and were used to increase student reading comprehension. A fourth project, for which the researchers did not develop any lessons, was the connected approach used by GTECH. In this project, new curriculum resources were collectively developed by groups of teachers. Nine school-based teams of science, mathematics, and technology teachers created 16 integrated units. These development teams were supported by the research team through a professional training program. The project reported that the mathematics teachers withdrew from the curriculum development because they felt that there was no time for science and technology in the mathematics classes.

Three projects in the middle and on the top end of the complexity staircase (AIMS, Seeds/Roots, and Angles), offered the classroom teachers complete integrated teaching units. The development of the units sometimes involved a selected group of teachers. In the Angles and Seeds/Roots projects, it seems that the researchers developed most of the materials, respectively, 3 units with 4 lessons and 12 units with 30 lessons. In the PrimaryConnections project, in which literacy skills were nested in science education, teaching materials were designed and tested by researchers and a selection of teachers. The teachers who received the units for classroom usage felt reassured by the involvement of teachers in the units' development and testing.

Do not print or distribute without permission from the author.

In none of the projects has it been reported that teachers have received technical support with the hands-on activities, and classroom assistance with these activities has never been present. As reported, exploring and hands-on activities should be facilitated in PD programs and pre-designed lessons. Sometimes teachers mention a lack of resources and time. Nowhere, however, has the lack of support seemed to have been a deal-breaker for the teachers in implementing hands-on activities.

Reported problems with integration

Most projects have reported some difficulties with implementing the integrated curriculum. Some of the problems have already been mentioned in a specific context, and here we will place them in a broader perspective.

A first obstacle is the lack of time/space within the existing curricula and timetables. In the connected approach to integration (GTECH), problems were reported with involving the teachers in the project. The researcher found that mathematics content was rarely integrated into the units for science and technology. Furthermore, the science teachers were often the only teachers who implemented the units in their lessons. The mathematics teachers, especially, indicated that there was no space or time in the curriculum.

A lack of time within the existing curriculum for science in combination with the overwhelming importance of mathematics and language has also been reported by the Seeds/Roots project. Similar concerns were reported in other projects. Teachers in the PrimaryConnections project reported on 'the on-going battle with literacy and numeracy for time'. The researchers involved with the Seeds/Roots project hypothesized that 'the emphasis [on] language in the educational system may slow the promotion of science down.' In the WEE project, the children were not free to investigate what they wished: they had to choose explorations that fit into the limited time available. The teachers in the Angles project were sometimes in a hurry to carry on with their teaching plans instead of being patient and giving the students the amount of time they needed to investigate the concept of angles until they fully understood it.

A second, related obstacle in primary education concerned curricular aims. In some of the projects in the middle and on the top of the integration staircase, conflicts have occurred between the new units and the existing curriculum. The AIMS project, for example, experienced problems connecting the new activities with the curriculum. They therefore provided extra information for teachers that helped them link the integrated curriculum to their traditional curriculum instead of treating it as 'isolated fun activities'. In the IDEAS project, one of the initial barriers for teachers was that the proposed alternative way of teaching reading/language was feared not to comply with state curricula and standardized testing.

A third problem concerned the assessment of integrated curricula. Because of the importance of standardized testing, schools want to be able to confirm their choices by presenting good learning results. Classroom assessment is not always easy, especially when the aim is to achieve higher-order thinking skills. Some PD programs, therefore, have addressed the development of assessment tools that primary teachers can use.

Do not print or distribute without permission from the author.

A fourth problem in the implementation of integrated approaches is primary teacher confidence and background in teaching science and technology, especially in the projects in which many hands-on activities are introduced. PrimaryConnections reported teachers having low self-efficacy in teaching science because some teachers did not yet understand the goals and methods of teaching of science. The AIMS project reported that because of the involvement of teachers in the development of the materials, other teachers were reassured and felt more confident about trying the lessons.

Other obstacles arose from school-level factors. In four projects, support on the school administration level was described as difficult. WEE and AIMS mentioned the high costs of materials and the difficulties in obtaining a budget for them. Searching for low-cost alternatives was important in these projects. Teachers in PrimaryConnections and AIMS experienced difficulties with resources such as storage space. Another aspect, and a potential problem, is that both teachers and school managers should understand the value of science in general and the value of teaching science in particular (Fullan, 2001). In the scale-up of the IDEAS activities, the persuasion of teachers, principals, and administrators that the program added value to the standard curriculum received extra attention. Teachers in Seeds/Roots expressed the need to help participants comprehend the vision and value of the program.

The costs of PD programs also posed difficulties in some cases. Large-scale innovations in particular, such as PrimaryConnections and IDEAS, have high costs for PD and scale-up projects. For large and small projects alike, the costs for curriculum materials (in the case of AIMS), books (in the cases of WEE and CORI), and science equipment and supplies for hands-on learning (in the cases of AIMS and Primary Science) were mentioned as barriers to implementation.

Finally, another relevant problem was scale-up and sustainability. Both PrimaryConnections and IDEAS recognized the risk of failing to create a sustained improvement. Within a short period of time, there was increased attention on integrated units and science; but when funding comes to an end, a school should be willing and able to continue its efforts. Therefore, both projects spent a lot of energy on the scale-up activities and sustainability. Key elements were school-wide implementation, teacher PD over a multi-year period, and a network of mentors and seminars. The CORI project reported that the success of implementation depended on incorporating a set of coherent practices. In a classroom setting, it is not possible to implement only part of a strategy because everything is interdependent. Most integration projects not only use integrated lessons; they also depend on higher-order thinking skills and a more student-centred pedagogy.

Discussion and Conclusion

In this study, we set out to review integrated primary-school curricula in which science and/or technology were integrated with mathematics or language education. In order to help solve the problem of a lack of attention on science and technology in primary education, we have intended to support primary teachers and schools in making informed decisions on the way to integrate science and technology into their curricula.

Based on a series of theoretically described approaches of integration (Drake, 2007; Fogarty, 2009; Haggis & Adey, 1979; Hurley, 2001; Rennie et al., 2012a) we proposed a

framework that provided defined descriptions of integration and its various types based on their level of complexity.

Overall, the reported effects (research question 1) have been positive. In general, students' motivation and appreciation of science and technology are reported to have increased, and most projects have also reported an increase in the time spent on science. Projects have also reported students' appreciation of more holistic knowledge, which they can use in real world situations, and the positive development of students' attitudes and engagement (Venville, Rennie, & Wallace, 2012). In addition, the projects have generally reported positive learning results in the domain of science and technology as well as in the domains of mathematics and language, which involve knowledge as well as higher order thinking skills. This is in line with previous research on other school levels (e.g. Czerniak, 2007) and previous, more general research that has reported that students in integrated curricula 'do as well as, and often better than' students in discipline-based curricula (Vars, 1996, p. 148).

Regarding the second research question, teachers were found to value the aims and positive effects on student motivation of the integrated science projects. This also raised their self-efficacy and commitment. They have also recognized integration as a way to teach science and technology within the constraints of an overloaded curriculum. Teachers are generally motivated and optimistic about teaching science/technology and 21st- century skills, which they value as beneficial for all school subjects as well as in everyday life. In line with Keys (2003), we find that integrating science and technology with other school subjects can compensate for primary teachers' lack of confidence in science teaching due to perceived low self-efficacy and a possible lack of knowledge. This argument is specific for primary schools where the teachers are non-specialists.

In general, we have concluded that the findings belie the widespread fear that primary teachers lack to a critical degree the knowledge and self-efficacy that are necessary to effectively teach either science or science in an integrated form. In none of the projects was particular technical support considered necessary. Once initiated, with a manageable amount of PD and support, integrated science projects can be effective.

Not all projects have these characteristics in equal amounts, and this seems to be related primarily to the type of integration pursued and sometimes modulated by particular project characteristics such as the scale of the project and the subjects integrated. This is in line with Rennie and colleagues (2012a) who state that 'each curriculum must be judged according to its purpose' (p. 5). Hence, we will take a careful look at our primary education projects in search of relations between their position on the complexity ladder, and learning effects and factors in implementation (hindrances and affordances).

Looking at the connected approach (GTECH), we have found very little evidence of effects on learning and increased time for science. Participating teachers have observed increased student skills, but one main problem has occurred in involving all of the participating teachers in the implementation. In the connected approach, teachers with a single disciplinary background have each taught a separate section of the integrated curriculum. The teachers' mono-disciplinary focus and separate teaching have possibly made it unnecessary to integrate the subjects, and teachers therefore have prioritized their own

disciplines. In the GTECH study, in which mathematics, science, and technology were to be integrated, the mathematics teachers indicated that they did not have the time to participate fully in the integration project. The mathematics content was therefore not incorporated into the integrated curriculum. It could be that if there had been only one teacher to teach all subjects instead of three, it would have been easier to incorporate all of the chosen subjects. In other integration approaches, we observed that teachers' initial hesitation disappeared when they experience the successes of the integrated curriculum. In order for this to take place, teachers and schools must be willing to take the first step. A construction wherein teachers focus separately on the different subjects that are involved in the integration project does not appear to be effective.

The overall conclusion is that the connected approach may be ineffective in creating more attention on science and technology in primary schools. It is not immediately convincing to teachers, nor do the circumstances created lead to enough student enthusiasm or learning results to boost teachers' motivation. Therefore, the model does not appear to lead to a sustained, and higher level of attention on science and technology. On the other hand, apart from the effort put in by the teachers, the costs in terms of PD and teacher support are relatively low. Because the standard aims and the curricula change only slightly in a connected approach, it is relatively easy to start. It also appears to be relatively cheap and requires only limited support on school-level factors (cf. Jacobs, 1989).

The three projects using a nested approach to integration have reported learning enhancement mostly with respect to the main topic of the resulting lessons. In the case of CORI and WEE, science and technology were nested in language education. The addition of science and technology was intended to increase reading motivation by focusing reading on a useful topic. In the case of PrimaryConnections, the opposite is true: most attention in the classroom is given to science/technology instead of reading and language.

The nested projects have led to the acquisition of science knowledge and reading skills. Reports on 21st-century skills were absent in WEE and scarce in CORI. PrimaryConnections has science as a main focus, and it is therefore not unexpected that they reported more extensively on 21st-century skills. The projects have also led to students adopting favourable attitudes toward the subjects and to sustained motivation and commitment on the part of the teachers. Furthermore, the time spent on science and technology has increased. Both outcomes were achieved with a relatively small amount of time invested in PD specifically tailored to the 'embedded' subject of the integration. Standard curricular goals can still be achieved, and the support and effort required on a school managerial level seems limited. Again, the focus on science instead of literacy in PrimaryConnections has caused some teachers to need more support from the school. WEE and CORI do not require much teacher support in the form of pre-designed lesson materials.

A clear hazard of the nested approach, however, is that one of the subjects—the one that is nested into the other—can be more or less neglected. Students and teachers may be well-prepared for one of the integrated subjects but less well-equipped for the complementary subject. PD in all three projects with a nested approach usually requires investing more time and effort in one of the subjects. This is also reflected in classrooms practices. Not surprisingly, teachers involved in PrimaryConnections called for more and better integration

of literacy into the science units. Another issue is that a nested approach may not be able to completely replace both subjects. This is reflected by the report on misconceptions in the WEE project. This could indicate that in a nested approach, the smaller and embedded subject needs to be addressed separately.

In the multidisciplinary approach to integration (2 projects), both disciplines that are integrated appear to benefit from the integration. Especially in the large-scale IDEAS project, detailed results demonstrated improved learning effects in knowledge and skills, very positive attitudes, and more time spent on science. Both projects reported that the students acquired higher-order, domain-related skills (investigation, in-depth learning, and reading).

We have concluded that these types of projects necessitate major changes on the part of the teachers. Compared to the connected and nested approaches, the multidisciplinary projects invested more time and effort in developing curricula, especially for the science sections. This was caused by the need to make changes in the existing curricula and even, to some extent, in the subject's aims. For example, in Angles, a teaching sequence was implemented and tested several times by the researchers over three years preceding the classroom implementation. The multidisciplinary model also necessitates more PD and teacher support. In the IDEAS project, teachers have been supported and trained in a multi-year program to ensure sustainability. This multi-year investment in multidisciplinary approaches also seems to be necessary to overcome an initial barrier where teachers fear accountability-oriented government or state testing. Through successful experiences, and maybe through the ownership they acquired during this process, teachers were able to overcome these fears. The multidisciplinary approach requires more investment and school-level support over a longer period of time than the nested approach.

The projects that use interdisciplinary and transdisciplinary approaches (2 projects) reported favourable learning effects and attitudes. Because the learning effects may include knowledge and 21st-century skills, which are not a regular part of the disciplines, assessment is less straightforward, and the meaning of the results less clear.. The teachers and students were generally highly enthusiastic, engaged, and active in the integrated curriculum. The Seeds/Roots projects resulted in a significant amount of time spent on science. Ninety minutes were spent daily on reading instructions using texts with science content goals; twice a week, reading was replaced with hands-on investigation.

These projects have provided the teachers with a growing degree of structure and previously developed materials. Integration projects with this approach have developed many curricular resources and teaching units for teachers. PD is extensive in one of the projects, and in the other project, it is called for by both teachers and researchers. It seems likely that these projects and the requested curricular changes are so encompassing that it is hardly possible for teachers to manage on their own without the support of supplementary materials and PD.

Because these types of integration imply changes being made to standard educational goals as well as the use of new teaching methods, we think that support for the teachers is vital. In the Seeds/Roots project, for example, not all teachers had the skills and confidence to successfully implement interdisciplinary, integrated curricula. In the AIMS project, teachers

were afraid of losing connection with the official curriculum. The students' activities were, consequently, sometimes too 'teacher-guided' to foster the desired, higher-order thinking skills. The involvement of teachers in the development of curricular materials was found to be reassuring for other teachers.

Interdisciplinary and transdisciplinary types of integration appear to yield high student and teacher motivation and advanced learning results, but they require a large scale and vast and sustained investments on the part of both teachers and schools.

We propose the model in Figure 2 as a summary of our conclusions. This model connects the descriptive typology of integrated curricula (the integration staircase) with both the expected cognitive and affective effects and the project requirements that particularly concern teacher PD and support.

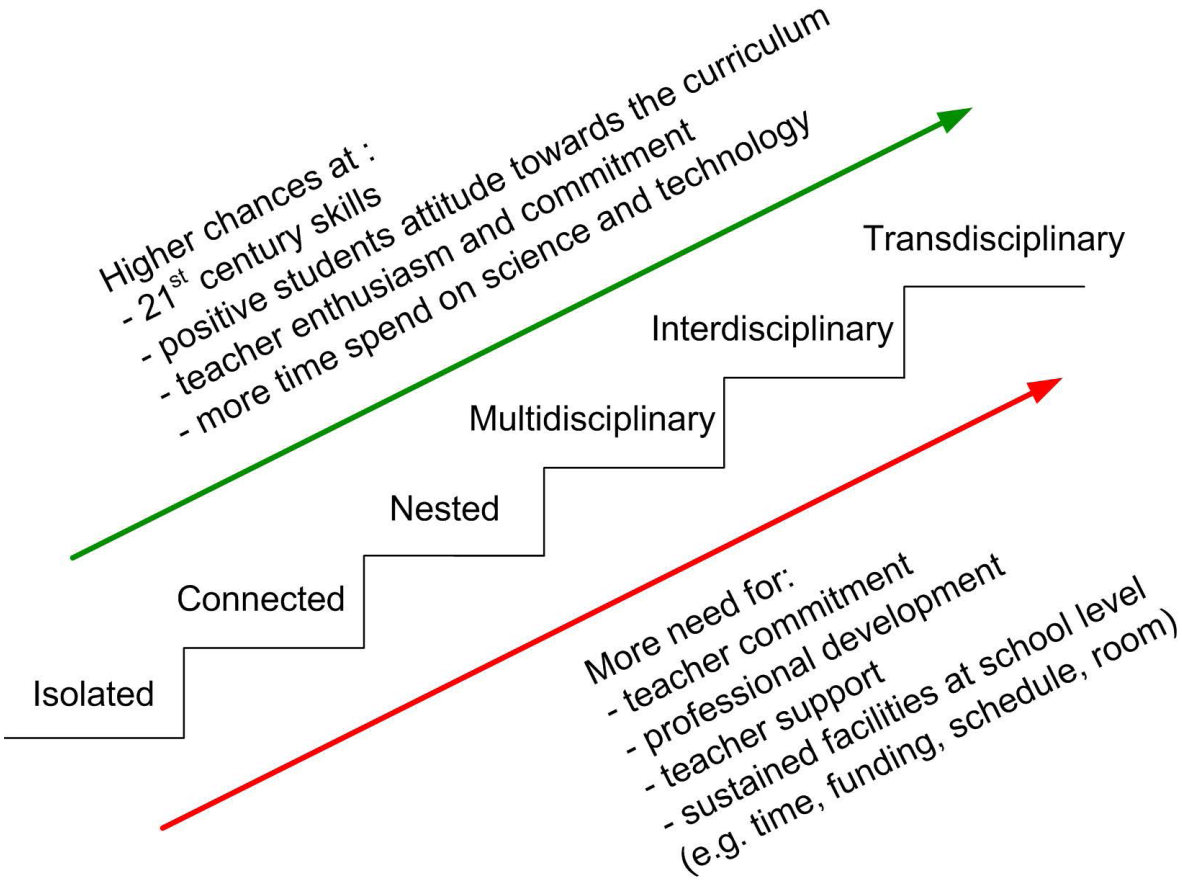

Figure 2: Model of integrated curricula. Proposed correlation between the approaches to integration and the chances and needs for students and teachers.

Roughly speaking, the higher and more complex the type of integration is on the integration staircase, the greater the expected gain will be in terms of the expected learning outcomes such as curriculum knowledge, higher-order skills; and 21st century skills the enthusiasm generated within the students and the teachers; and the teacher commitment generated. Concurrently, the more complex the type of integration is, the higher the required investment must be in order to overcome tensions with the normal curriculum in terms of the

teacher commitment, the critical scale and duration of the project, the volume and comprehensiveness of teacher PD, the volume and quality of the teacher support, and the support on the school level.

The general picture is that the projects that use integration types that are high on the complexity staircase are more rewarding for the teachers and may better be able to sustain teacher motivation and commitment. At the lower end of the staircase, for example, the various subjects are taught separately, or even by different, specialist teachers. The teachers remain in their comfort zone, but there is little opportunity to implement a powerful and meaningful real-life learning environment and to achieve accompanying 21st-century learning goals. At the top end of the staircase, teachers have to teach integrated lessons with learning goals from several subjects. This places a greater strain on the teacher but appears to lead to higher motivation in students, and, moreover, offers learning opportunities for hands-on skills, problem-solving skills, and 21st-century skills. These successes, in turn, enhance teachers' determination to sustain the integrated curriculum. Deviations from this general picture may occur. Irregularities can, however, be explained. For example, the emphasis on science activities and pedagogies (PCK) in the PrimaryConnections project can account for students' and teachers' engagement and for the focus on problem-solving skills.

We expect that the positive reinforcement that teachers and students exert on each other during an integrated curriculum are emphasized in primary education where students are instructed by only one teacher who teaches all subjects. Certain rewards of integration, such as a positive classroom atmosphere, are within easy access because of day-to -day interactions. This situation probably makes the dissolution of the boundaries between the subjects in primary education easier than it is in secondary education.

Study Limitations

Various limitations apply to our study. A first limitation of our model is its empirical basis. Although it was based on previous reviews and an on analysis of all projects that have recently became known, the amount of data available is still limited. The focus group provided supplementary information and expertise that broadened the study's basis. Integration projects may also focus primarily on 'getting things done' instead of focusing on scholarly research. Even though all of the projects we analyzed were involved in at least one research study, only three projects used control groups in their research. Finally, we could only incorporate results that had been published. An example is that although we looked for reported learning gains on 21st century skills in all of the studies, it may be that they were simply not researched and reported in the older articles because the focus on these skills has been growing in particular during the last 10 years. In terms of Rennie et al. (2010), the available data limit the lenses we can use to analyze them.

A second limitation is inherent in the model we have used. Even though we grounded the categorization of projects in descriptive criteria (complexity) to avoid overlapping categories, it may not always be possible to unambiguously and mutually exclusively categorize projects (Haggis & Adey, 1979). There rather may be hybrid or intermediate forms of integration existing in a continuum (cf. Hinde, 2005). Also, analyzing and categorizing approaches from articles and other written sources alone may introduce a bias and never be

able to fully reflect the richness of each individual project. Effects and success factors depend in part on idiosyncratic characteristics: the subjects integrated, cultural and curricular context, size, topics, and so on. For example, in some countries, science and technology are separate subjects, while in others they are one. This may influence, for instance, teacher enthusiasm and commitment.

We sought to overcome these limitations by employing the focus group in parallel with the review. This helped to enlarge the scope of the information analyzed and to maximize the outcome validity, coherence and practical value. We think that despite the limitations, we have managed to construct a tentative, coherent, and consistent model that is able to guide informed discussions on integrated primary science and technology education. The model's status is that of a tentative picture that is as good as it can currently be.

Summary

The model we propose is a valuable addition that practitioners may use to make informed decisions on developing and implementing integrated science curricula in primary schools. It may give substance to Hurley's (2001) call for more research that 'address[es] issues of curriculum implementation that would vary from form to form' (p. 265).

From a theoretical point of view, our tentative model has contributed to solving Czerniak's definition problem in a productive way. 'Integrated curriculum' has been recognized to be a *container concept*, that denotes a whole class of objects that show very distinct characteristics (cf. Rennie et al., 2012b), but for which a definition can be given that meaningfully relates to the educational characteristics of all integrated curricula. Integrated curricula are diverse, and our tentative model meaningfully relates classification on the complexity staircase to important other educational characteristics.

An important characteristic of our model is that it relates content specific aspects of the learning environment to characteristics of successfully implementing integrated curricula. This is in line with Thijs and Van den Akker (2009), who suggested that changes in one aspect of education, such as the objectives, presuppose changes in many other aspects of education, such as teacher roles, resources, and learning activities. Our research suggests that such a dependency exists between complexity of integration, learning outcomes, and innovation efforts.

From a practical point of view, the model can help people make decisions on curricular integration projects by correlating the necessary investments with the expected outcomes. It provides a specification of Venville's (2002) idea of taking into account the underlying concept of integration when thinking about implementation. One could suppose that transdisciplinary integration would be the best choice for improving science and technology in primary education. But when limited means are available or when the scale is limited to only a few schools, it is not very likely that a transdisciplinary or even an interdisciplinary project will be successful. In this case, a nested or multidisciplinary approach may be a better. In any case, a key finding in our review is encouraging: when appropriate support and PD were present, a presumed lack of science knowledge and low self-efficacy among teachers concerning teaching science was not a fail factor in any of the projects reviewed.

Do not print or distribute without permission from the author.

References

Aikin, W. M. (1942). *The story of the eight-year study*. New York: Harper & Brothers.

Anderson, T. H., West, C. K., Beck, D. P., Macdonell, E. S., & Frisbie, D. S. (1997). Integrating reading and science education: On developing and evaluating WEE science. *Journal of Curriculum Studies, 29*(6), 711–734.

Appleton, K. (2002). Science activities that work: Perceptions of primary school teachers. *Research in Science Education, 32*(3), 393-410.

Appleton, K. (2007). Elementary science teaching. In S. K. Abell & N. G. Lederman (Eds.), *Handbook of Research on Science Education.* (pp. 493-535). Mahwah, New Jersey: Lawrence Erlbaum Associates.

Australian Academy of Science. (2011). Summary of the PrimaryConnections Research Report Data Retrieved 27-10-2011, 2011, from http://www.science.org.au/primaryconnections/research-and-evaluation/

Barber, J., Catz, K. N., Arya, D., & Berkeley, C. A. (2006). *Improving Science Content Acquisition through a Combined Science/Literacy Approach: A Quasi-Experimental Study*. Paper presented at the American Educational Research Association.

Beane, J. A. (1997). *Curriculum Integration: Designing the Core of Democratic Education*: Teachers College Press.

Berlin, D. F., & Hillen, J. A. (1994). Making connections in math and science: Identifying student outcomes. *School Science and Mathematics, 94*(6), 283–290.

Burns, R. C. (1995). *Dissolving the boundaries: Planning for curriculum integration in middle and secondary schools*. Charleston: Appalachia Educational Laboratory.

Bybee, R. W. (1997). *Achieving Scientific Literacy: From Purposes to Practices*. Portsmouth, NH: Hieneman.

Cervetti, G. N., Pearson, P. D., Barber, J., Hiebert, E. H., & Bravo, M. (2007). Integrating Literacy and Science The Research We Have, The Research We Need. In M. Pressley (Ed.), *Shaping Literacy Achievement: Research We Have, Research We Need* New York: The Guilford Press.

Cervetti, G. N., Pearson, P. D., Bravo, M. A., & Barber, J. (2006). Reading and Writing in the Service of Inquiry-Based Science In R. Douglas, M. Klentschy & K. Worth (Eds.), *Linking Science & Literacy in the K-8 Classroom.* (pp. 221–244). Arlington, Virginia: NSTA Press.

Chin, C., & Brown, D. E. (2000). Learning in science: A comparison of deep and surface approaches. *Journal of Research in Science Teaching, 37*(2), 109–138.

Czerniak, C. M. (2007). Interdisciplinary science teaching. In S. K. Abell & N. G. Lederman (Eds.), *Handbook of research on science education* (pp. 537-559). Mahwah, New Jersey: Lawrence Erlbaum Associates.

Czerniak, C. M., Weber, W. B. J., Sandmann, A., & Ahern, J. (1999). A Literature Review of Science and Mathematics Integration. *School Science and Mathematics, 99*(8).

Dawson, V. (2009). Science is primary A review of PrimaryConnections. Canberra: Australian Academy of Science.

Deal, D. (1994). A look at Project AIMS. *School Science and Mathematics, 94*(1), 11–14.

Dede, C. (2010). Comparing frameworks for 21st century skills. *21st century skills: Rethinking how students learn*, 51–76.

Drake, S. M. (1998). *Creating Integrated Curriculum: Proven Ways To Increase Student Learning*: Corwin Press.

Drake, S. M. (2000). *Integrated curriculum: A chapter of the curriculum handbook*. Alexandria, VA: Association for Supervision and Curriculum Development.

Drake, S. M. (2007). *Creating standards-based integrated curriculum: Aligning curriculum, content, assessment, and instruction* (second ed.): Corwin Press.

Dutch Inspectorate Of Education. (2005). *Techniek in het basisonderwijs [techmology in primary school]* (Vol. 3). Schiedam: Inspectorate of education.

Ely, D. P. (1990). Conditions that facilitate the implementation of educational technology innovations. *Journal of Research on Computing in Education, 23*(2), 298–305.

Fogarty, R. (1991). Ten Ways to Integrate Curriculum. *Educational Leadership, 49*(2), 61–65.

Fogarty, R. (2009). *How to Integrate the Curricula* (third ed.): Corwin Press.

Fullan, M. (2001). *The new meaning of educational change*: Teachers College Pr.

Gavelek, J. R., Raphael, T. E., Biondo, S. M., & Wang, D. (1999). Integrated literacy Instruction: A review of the literature (Vol. CIERA Report #2-001): Center for the Improvement of Early Reading Achievement, University of Michigan.

George, P. S. (1996). The Integrated Curriculum: A Reality Check. *Middle school journal, 28*(1), 12–19.

Girod, M. (2005). Science Learning in the Terrarium Habitats Unit *Seeds of Science/Roots of Reading: Effective Tools for Developing Literacy Through Science in the Early Grades*: The Vermont Institutes and Western Oregon University.

Goldschmidt, P., & Jung, H. (2011a). Evaluation of Seeds of Science/Roots of Reading: Effective Tools for Developing Literacy through Science in the Early Grades--Unit on Planets and Moons. Los Angeles, CA: National Center for Research on Evaluation, Standards, and Student Testing (CRESST).

Goldschmidt, P., & Jung, H. (2011b). Evaluation of Seeds of Science/Roots of Reading: Effective Tools for Developing Literacy through Science in the Early Grades-Light Energy Unit. Los Angeles, CA: University of California, National Center for Research on Evaluation, Standards, and Student Testing (CRESST).

Gravemeijer, K. (2004). Local instruction theories as means of support for teachers in reform mathematics education. *Hypothetical Learning Trajectories: A Special Issue of Mathematical Thinking and Learning, 6*(2), 105–128.

Guthrie, J. T., McRae, A., Coddington, C. S., Lutz Klauda, S., Wigfield, A., & Barbosa, P. (2009). Impacts of comprehensive reading instruction on diverse outcomes of low-and high-achieving readers. *Journal of learning disabilities, 42*(3), 195.

Guthrie, J. T., McRae, A., & Klauda, S. L. (2007). Contributions of concept-oriented reading instruction to knowledge about interventions for motivations in reading. *Educational Psychologist, 42*(4), 237–250.

Guthrie, J. T., Wigfield, A., Barbosa, P., Perencevich, K. C., Taboada, A., Davis, M. H., . . . Tonks, S. (2004). Increasing Reading Comprehension and Engagement Through Concept-Oriented Reading Instruction. *Journal of Educational Psychology, 96*(3), 403.

Hackling, M. W. (2007). Using assessment to improve teaching and learning in primary science. In V. M. Dawson & G. J. Venville (Eds.), *The Art of Teaching Primary Science* (pp. 164–180): Allen & Unwin.

Hackling, M. W., Peers, S., & Prain, V. (2007). Primary Connections: Reforming science teaching in Australian primary schools. *teaching science, 53*(3), 12–16.

Hackling, M. W., & Prain, V. (2005). *Primary Connections: Stage 2 Trial Research Report*: Australian Academy of Science.

Hackling, M. W., & Prain, V. (2008). Impact of Primary Connections on students' science processes, literacies of science and attitudes towards science: Australian Academy of Science.

Haggis, S., & Adey, P. (1979). A review of integrated science education worldwide. *Studies in Science Education, 6*, 69-89.

Hanauer, D. (2005). The Multiliteracy Tasks of Inquiry Science Instruction: A Qualitative Study of Second Grade Classroom Implementation of the "Shoreline Science" Science Unit: The Vermont Institutes and Western Oregon University.

Harden, R. M. (2000). The integration ladder: a tool for curriculum planning and evaluation. *Medical education, 34*(7), 551–557.

Hattie, J. (2003). *Teachers make a difference: what is the research evidence?* Paper presented at the the Australian Council for Educational Research Annual Conference on Building Teacher Quality, Melbourne.

Hinde, E. R. (2005). Revisiting Curriculum Integration: A Fresh Look at an Old Idea. *Social Studies, 96*(3), 7.

Hurd, P. D. H. (1998). Scientific literacy: New minds for a changing world. *Science Education, 82*(3), 407–416.

Hurley, M. M. (2001). Reviewing Integrated Science and Mathematics: The Search for Evidence and Definitions from New Perspectives. *School Science and Mathematics, 101*(5).

Jacobs, H. H. (Ed.). (1989). *Interdiciplinary Curriculum: design and implementation*. Alexandria: Association for supervision and curriculum development.

James, R. K., Lamb, C. E., Householder, D. L., & Bailey, M. A. (2000). Integrating Science, Mathematics, and Technology in Middle School Technology Rich Environments: A Study of Implementation and Change. *School Science and Mathematics, 100*(1), 27–35.

Keys, P. M. (2003). *Primary and secondary teachers shaping the science curriculum: The influence of teacher knowledge.* PhD, Queensland University of Technology.

Lawrence Hall of Science. (2012). Seeds of Science / Roots of Reading: Program Overview Retrieved December, 2012, from http://scienceandliteracy.org/sites/scienceandliteracy.org/files/ProgramOverview.pdf

Léna, P. (2006). Erasmus Lecture 2005 From science to education: the need for a revolution. *European Review, 14*(1), 3–21. doi: 10.1017/S1062798706000020

Levitt, K. E. (2002). An analysis of elementary teachers' beliefs regarding the teaching and learning of science. *Science Education, 86*(1), 1–22.

Lewis, T. (2006). Design and inquiry: Bases for an accommodation between science and technology education in the curriculum? *Journal of Research in Science Teaching, 43*(3), 255–281.

Martin, M. O., Mullis, I. V. S., Foy, P., & Stanco, G. M. (2012). TIMSS 2011 International Results in Science. Chestnut Hill, MA TIMSS & PIRLS International Study Center, Boston College.

Morgan, D. L. (1996). Focus groups. *Annual review of sociology*, 129–152.

Morgan, D. L., & Spanish, M. T. (1984). Focus groups: A new tool for qualitative research. *Qualitative sociology, 7*(3), 253–270.

Muhr, T., & Friese, S. (2004). User's Manual for ATLAS. ti 5.0. *Berlin: ATLAS. ti Scientific Software Development GmbH*.

Mulholland, J., & Wallace, J. (2005). Growing the tree of teacher knowledge: Ten years of learning to teach elementary science. *Journal of Research in Science Teaching, 42*(7), 767-790.

Munier, V., & Merle, H. (2009). Interdisciplinary mathematics-physics approaches to teaching the concept of angle in elementary school. *International Journal of Science Education, 31*(14), 1857–1895.

Murphy, C., & Beggs, J. (2005). Primary science in the UK: a scoping study. *Final Report to the Wellcome Trust. London: Wellcome Trust*.

OECD. (2007). Pisa 2006: Science competencies for tomorrow's world Executive Summary.

Orpwood, G. (2007). Assessing scientific literacy: Threats and opportunities. In Cedric Linder, Leif Östman & Per-Olof Wickman (Eds.), *Promoting Scientific Literacy: Science Education Research in Transaction: Proceedings of the Linnaeus Tercentenary Symposium* (pp. 120-129). Uppsala University, Uppsala, Sweden: Geotryckeriet.

Osborne, J., & Dillon, J. (2008). Science education in Europe: Critical reflections. London: The Nuffield Foundation.

Osborne, J., Simon, S., & Collins, S. (2003). Attitudes towards science: a review of the literature and its implications. *International Journal of Science Education, 25*(9), 1049-1079.

Pinto, R. (2005). Introducing curriculum innovations in science: Identifying teachers' transformations and the design of related teacher education. *Science Education, 89*(1), 1–12.

Rennie, L. J., Venville, G. J., & Wallace, J. (2010). Learning science in an integrated classroom: Finding balance through theoretical triangulation. *Journal of Curriculum Studies, 99999*(1), 1-24.

Rennie, L. J., Venville, G. J., & Wallace, J. (2012a). *Integrating Science, Technology, Engineering, and Mathematics: Issues, Reflections, and Ways Forward*. New York: Routledge

Rennie, L. J., Venville, G. J., & Wallace, J. (2012b). *Knowledge that Counts in a Global Community: Exploring the Contribution of Integrated Curriculum*. London: Routledge.

Rocard, M., Csermely, P., Jorde, D., Lenzen, D., Walwerg-Henriksson, H., & Hemmo, V. (2007). *Science education now: A renewed pedagogy for the future of Europe*. Luxemburg: Office for Official Publications of the European Communities.

Rohaan, E., & Van Keulen, H. (2011). What Everyone Should Know About Science and Technology. *Professional Development for Primary Teachers in Science and Technology*, 35–47.

Romance, N. R., & Vitale, M. R. (1992). A curriculum strategy that expands time for in depth elementary science instruction by using science based reading strategies: Effects of a year long study in grade four. *Journal of Research in Science Teaching, 29*(6), 545–554.

Romance, N. R., & Vitale, M. R. (2001). Implementing an in-depth expanded science model in elementary schools: Multi-year findings, research issues, and policy implications. *International Journal of Science Education, 23*(4), 373–404.

Romance, N. R., & Vitale, M. R. (2008). *Perspectives for Improving School Instruction and Learning: An Interdisciplinary Model for Integrating Science and Reading in Grades K–5*. Paper presented at the Committee on Education Workshop on Education Lecture Series, University of Chicago.

Shulman, L. S. (1987). Knowledge and teaching: Foundations of the new reform. *Harvard educational review, 57*(1), 1–23.

Thijs, A. M., & Van Den Akker, J. J. H. (2009). *Curriculum in development*. Enschede, the Netherlands: SLO, Netherlands Institute for Curriculum Development.

Traianou, A. (2006). *Understanding teacher expertise in primary science: a sociocultural approach.* Rotterdam: Sense Publishers.

Turner, S., & Ireson, G. (2010). Fifteen pupils' positive approach to primary school science: when does it decline? *Educational Studies, 36*(2), 119-141.

Tytler, R., & Osborne, J. (2012). Student attitudes and aspirations towards science. In B. Fraser, K. Tobin & C. McRobbie (Eds.), *Second international handbook of science education* (pp. 597-625). Dordrecht, The Netherlands: Springer.

van Aalderen-Smeets, S. I., Walma van der Molen, J. H., & Asma, L. J. (2012). Primary teachers' attitudes toward science: A new theoretical framework. *Science Education, 96*(1), 158-182.

Van Boxtel, C. (Ed.). (2009). *Vakintegratie in de mens- en maatschappijvakken*. Enschede: Printpartners Ipskamp.

Vars, G. F. (1996). Effects of interdisciplinary curriculum and instruction. In H. P.S. & W. W.G. (Eds.), *Annual review of research for school leaders* (pp. 147–164). Reston, VA: National Association of secondary school principals & scholastic publishing company.

Vars, G. F., & Beane, J. A. (2000). Integrative curriculum in a standards-based world. *ERIC Digest*.

Venville, G. J., Rennie, L. J., & Wallace, J. (2012). Curriculum integration: Challenging the assumption of school science as powerful knowledge. In B. Fraser, K. Tobin & C. McRobbie (Eds.), *Second International Handbook of Science Education* (pp. 737-749). Dordrecht, The Netherlands: Springer.

Venville, G. J., Wallace, J., Rennie, L. J., & Malone, J. A. (1998). The Integration of Science, Mathematics, and Technology in a Discipline Based Culture. *School Science and Mathematics, 98*(6), 294-302.

Venville, G. J., Wallace, J., Rennie, L. J., & Malone, J. A. (1999). *Science, mathematics and technology: Case studies of integrated teaching*: Key Centre for School Science and Mathematics, Curtin University of Technology.

Venville, G. J., Wallace, J., Rennie, L. J., & Malone, J. A. (2002). Curriculum integration: Eroding the high ground of science as a school subject? *Studies in Science Education, 37*, 43-84.

Vos, M. A. J. (2010). Interaction between teachers and teaching materials: On the implementation of context-based chemistry education. *Doctoral disssertation: Eindhoven School of Education, Eindhoven University of Technology*.

Wang, J., & Herman, J. (2005). Evaluation of Seeds of Science/Roots of Reading Project: Shoreline Science and Terrarium Investigations. Los Angeles, CA: University of California, National Center for Research on Evaluation, Standards, and Student Testing & Center for the Study of Evaluation (CSE).

Wopereis, I. G., Kirschner, P. A., Paas, F., Stoyanov, S., & Hendriks, M. (2005). Failure and success factors of educational ICT projects: a group concept

mapping approach. *British Journal of Educational Technology*, *36*(4), 681–684.

Wraga, W. (1996). A century of interdisciplinary curricula in American schools. *Annual review of research for school leaders*, 118–145.

Do not print or distribute without permission from the author.

Table 4: overview of the projects included sorted by approach to integration

Project name	**Complexity-staircase classification**	**Subject areas involved**	**Effects**	**Sources selected**
GTECH (USA)	Connected	Science, mathematics and technology	*Cognitive*: -not reported *Affective*: -not reported *Time*: -the project was done within the context of the science lessons alone, therefore no extra time was created. *Additional:* Teachers: increased students skills in problem solving, teamwork, technical expertise and creativity	James, Lamb, Householder, & Bailey (2000)
CORI (USA)	Nested	Focus on reading, science is the context	*Cognitive*: Students: Reading comprehension: 0.9 Science inquiry skills (*n* = 98): 0.57 knowledge acquisition(*n* = 502) 1.34 *Affective*: Students: Reading motivation: 0.30 *Time*: Reading/language in this period was dedicated to science/technology topics. Twice a week the dedicated oral reading fluency time was spent on hands-on activities or the study of science concepts. *Additional*: -	http://www.cori.umd.edu/ http://www.corilearning.com/ Guthrie et al. (2009), Guthrie, McRae, &Klauda(2007), Guthrie et al.(2004)
WEE (USA)	Nested	Focus on science, literacy as tool	*Cognitive*: Students: 177 procedural knowledge claims, 17 procedural knowledge claims, *Affective*: 16 affective claims. Students: 70% liked the exploring best.50% disliked nothing, 50 % did not like the video cameras or the explaining part. *Time*: The students talked ±3 times with their families about WEE and they highly enjoyed these conversations (3.27 on a 4 point scale). *Additional*: Students regularly express misconceptions on their final evaluation forms.	Anderson, West, Beck, Macdonell, &Frisbie(1997)
PrimaryConnections (Australia)	Nested	Focus on science, literacy as tool	*Cognitive*: Teachers: 87% believed integrating literacy improved science/technology learning. Students: twice as good in representing science/technology results. More students could identify the variables in an investigation. *Affective*: Teachers: 83% high self-efficacy. Students (*n* = 538): 90 % positive or neutral on the question 'Have you enjoyed science this term?' 86 % positive or neutral on question 'How much have you learned in science this term?' *Time*: Teachers: 98% said their teaching improved, science status and spent time increased. Classes (*n* = 91) with less than 30 minutes of science/technology a week declined from 27% to 11 % and classes that teach more than 60 minutes a week increase from 31% to around 62%. *Additional*: Science/technology was more taught in the morning during the 'high priority	http://www.science.org.au/primaryconnections Australian Academy of Science (2011); Dawson (2009) Hackling, Peers, &Prain(2007) Hackling &Prain(2005, 2008)

Do not print or distribute without permission from the author.

			subjects time' as the project evolves (*n* = 88).	
'Angles'* (France)	Multi-disciplinary	Science (physics) and mathematics	*Cognitive*: -not reported *Affective*: -not reported *Time*: -not reported *Additional*: students developed modelling skills and students got a better grasp of the concept of angles and important misconceptions were discarded	Munier& Merle (2009)
IDEAS (USA)	Multi-disciplinary	Science and reading	*Cognitive*: Students: science achievement 0.93 to 1.6 Reading achievement 0.3 to 05. *Affective*: - Students talk at informal moments about science concepts and experiments. Classroom observations: High student participation in the classroom, hinting at high motivation and interest. *Time*: - Classroom observations: at least 30 minutes a day spend on hands-on activities, experiments or demonstrations. *Additional*: - Classroom observations: the quality and amount of questions indicate an in-depth understanding of science/technology taught. Parents report their children enjoy reading,	http://scienceideas.org/ Romance & Vitale (1992, 2001, 2008)
SEEDS / ROOTS (USA)	Inter-disciplinary	Science and reading	*Cognitive*: Students: science content understanding and vocabulary. Nature of science assessment and vocabulary. No significant results for reading or writing. *Affective*: - *Time*: Treatment teachers (*n* = 35) spent approximately 50% more instructional time on the unit than control teachers per week. (from 180 minutes versus 270 minutes) *Additional*: Researchers report that teachers and students were active and enthusiastic. Teacher would teach the unit again if given the opportunity. Treatment teachers (*n* = 86) overwhelmingly found the Seeds/Roots unit usable, effective, and engaging. Teachers report development of science skills and cognitive abilities.	http://scienceandliteracy.org/ Barber, Catz, Arya, & Berkeley (2006) Cervetti, Pearson, Barber, Hiebert, & Bravo (2007) Cervetti, Pearson, Bravo, & Barber (2006) Goldschmidt & Jung (2011a, 2011b) Hanauer(2005) Lawrence Hall of Science (2012) Wang & Herman(2005) Girod (2005)
AIMS (USA)	Trans-disciplinary	Science and mathematics	*Cognitive*: The protocols reflected 423 cognitive outcomes *Affective*: The protocols reflected 234 affective outcomes and 188 social outcomes. *Time*: -not reported *Additional*: -not reported	http://www.aimsedu.org Berlin & Hillen (1994), Deal (1994)

* The name 'Angles' is not used by the original authors, but since all the other project have a name of their own we decided to name this project as well.

Do not print or distribute without permission from the author.

Biographical details for contributors:

Rens Gresnigt

Rens Gresnigt is a researcher at Eindhoven University of Technology and lecturer at Primary Teacher Training College Sittard. His research interests are teaching pedagogies for science in primary school, professional development of teachers and integrated curricula.

Ruurd Taconis:

Ruurd Taconis is associate professor and director of education at Eindhoven School of Education. He focuses on science education, the use of ICT in particular.

Hanno van Keulen:

Hanno van Keulen is professor of leadership in education at Windesheim Flevoland University of Applied Sciences in Almere, the Netherlands . His research interests are in the field of STEM education and on professional development of teachers and curricula.

Koeno Gravemeijer:

Koeno Gravemeijer is professor emeritus in Science and Technology Education at Eindhoven University of Technology in the Netherlands. Earlier he was professor in Mathematics Education at Utrecht University (Utrecht, the Netherlands) and Vanderbilt University (Nashville, USA). His research interests concern design research as a research method, domain-specific instruction theories, students' use of symbols and modelling, and—more recently—the goals and content of science- and mathematics education for the 21st. century.

Liesbeth Baartman:

Liesbeth Baartman works as a senior researcher and lecturer at Utrecht University of Applied Sciences, research group Vocational Education. Her main research interests are assessment in vocational education, validity and reliability, and learning processes at the boundary between school and work in vocational education.